February 2021

SERVICE MANUAL ADDENDUM

IC-V86/IC-V86-T/IC-G86

NOTE: Use these amended pages as one addendum set.
Do not mix them up with the previous master pages.

	Definitions
Replacement page	The page to replace the original one.
Addendum page	The page to be added to the original set.
Amended page	The page to be added as change history, including corrections.

Page number information

The number of revisions can be easily understood by the addendum service manual's page number.
The number of revisions (a, b, c, ...) is added after the page number.

CONTENTS

SECTION 4 ADJUSTMENT PROCEDURE ..... 4-1b~4-7b
SECTION 5 PARTS LIST ..... 5-1b~5-6b
SECTION 6 MECHANICAL PARTS ..... 6-1b~6-2b
SECTION 7 BOARD LAYOUTS ..... 7-1b~7-2b
SECTION 8 VOLTAGE DIAGRAM ..... 8-1b~8-6b

[Version List]

Model	Version	Version Number	Operable Frequency Range (MHz)	Maximum transmit output power	Installed unit		Remarks
					MAIN	MAIN-A	
IC-V86	USA-01	#11	136~174	7.0 W	✔	–	
IC-V86	EXP-01	#12	136~174	7.0 W	✔	–	
IC-V86	EXP-03	#13	136~174	7.0 W	✔	–	
IC-V86-T	THA-01	#31	144~147	5.0 W	✔	–	
IC-G86	EXP-01	#41	136~174	7.0 W	–	✔	

SECTION 4 ADJUSTMENT PROCEDURE

The underlined parts have been updated from the previous version of the addendum, or from the original page.

NOTE: For products with early serial numbers
Refer to the first edition of the IC-V86/V86-T service manual (published in April 2019) for the adjustment procedures.

[Applicable serial numbers]

Model Name	Version Number	Serial Numbers	Model Name	Version Number	Serial Numbers
IC-V86	#11	11001001 ~ 11027100	IC-V86	#13	13001001 ~ 13004800
IC-V86	#12	12001001 ~ 12006100	IC-V86-T	#31	31001001 ~ 31004700

4-1 PREPARATION

REQUIRED EQUIPMENT

EQUIPMENT	GRADE AND RANGE		EQUIPMENT	GRADE AND RANGE	
DC power supply	Output voltage: Current capacity:	7.5 V 3 A or more	JIG battery case	Modified BP-263. (See the illustration shown on page 4-2b.)	
Frequency counter	Range: Accuracy:	0.1~300 MHz ±1 ppm or better	JIG plug	Modified 3.5 mm (⅛ inch) stereo plug. (See the illustration shown on page 4-2b.)	
Attenuator	Attenuation: Capacity:	30 dB or 40 dB More than 10 W	JIG cable 1	Modified 2.5 mm (1/10 inch) stereo plug. (See the illustration shown on page 4-2b.)	
Audio generator (AG)	Frequency range: Output level:	300~3000 Hz 1 ~ 500 mV	JIG cable 2	Modified 3.5 mm (⅛ inch) stereo plug. (See the illustration shown on page 4-2b.)	
RF power meter (50 Ω terminated)	Measuring range: Frequency range: SWR:	0.1 ~ 10 W 100 ~ 300 MHz Less than 1.2 : 1	Standard signal generator (SSG)	Frequency range: Output level:	0.1 ~ 300 MHz −20 ~ 90 dBμV (−127 to −17 dBm)
AC millivoltmeter	Measuring range:	10 mV to 10 V	Distortion meter	Measuring accuracy: Input level:	3% or less at 1 kHz 50 mV to 10 V
Modulation analyzer	Frequency range: Measuring range:	30 ~ 300 MHz 0 ~ ±10 kHz	External speaker	Input impedance: Capacity:	8 Ω More than 1 W
Spectrum analyzer	Measuring range:	Up to 3 GHz	Ammeter	Measuring range:	0 to 10 A

CONNECTIONS

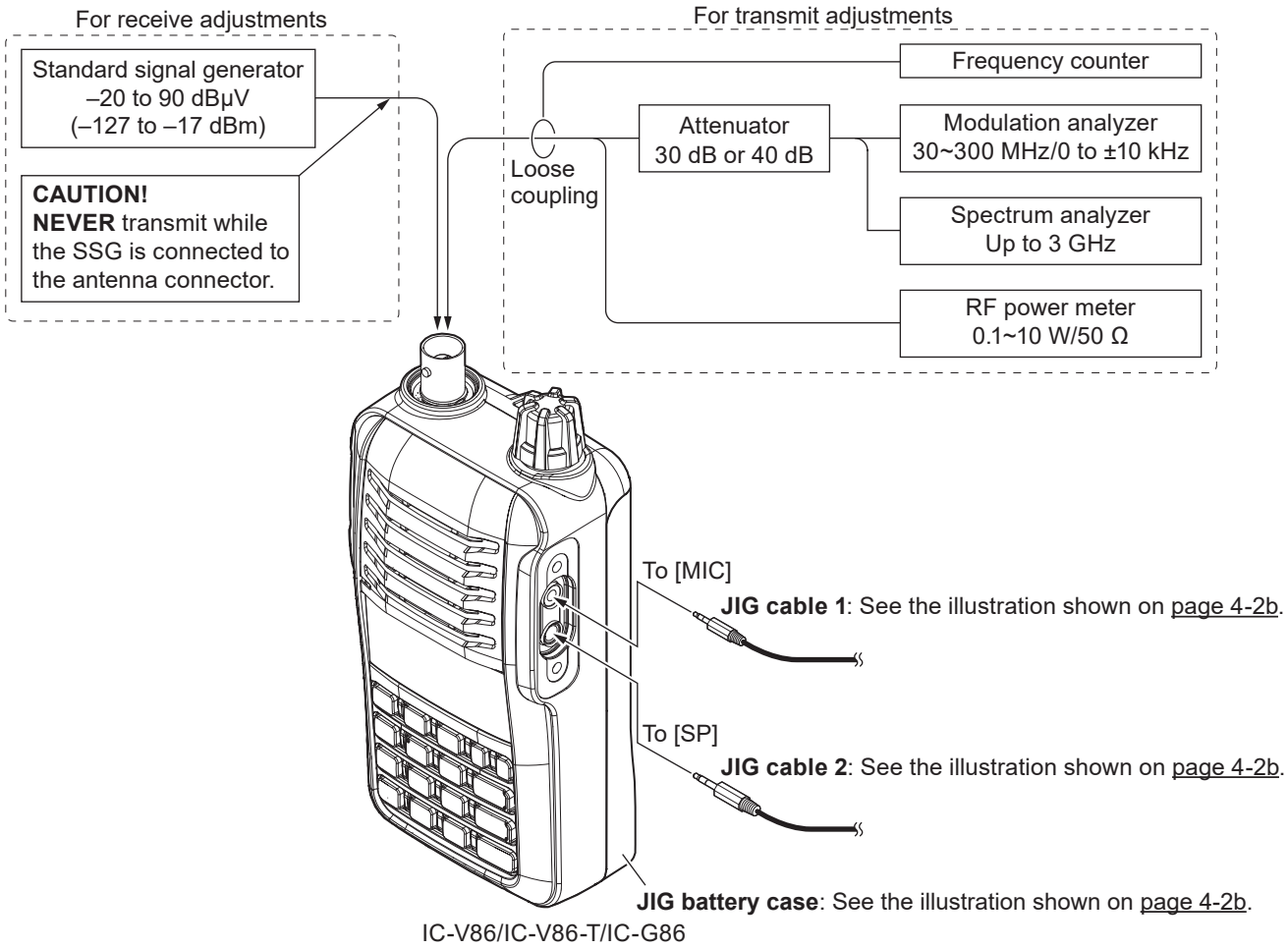

IC-V86/IC-V86-T/IC-G86

The underlined parts have been updated from the previous version of the addendum, or from the original page.

■ JIG

[JIG battery case]

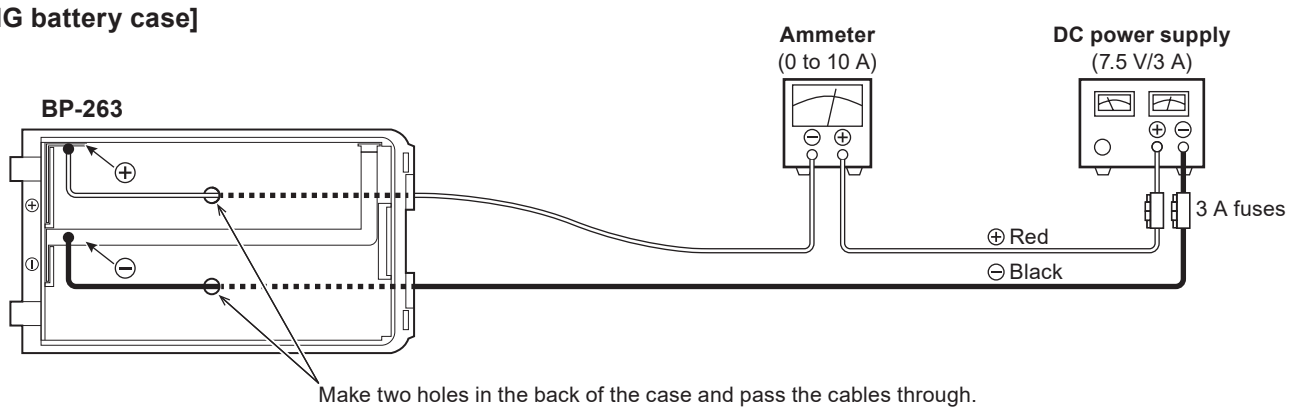

[JIG plug]

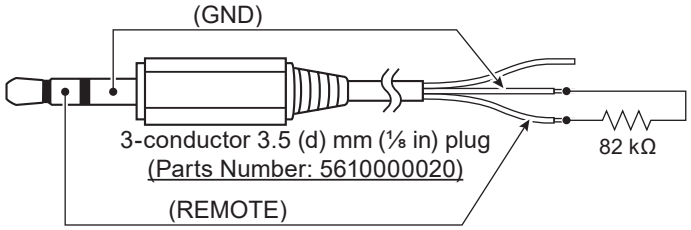

[JIG cable 1]

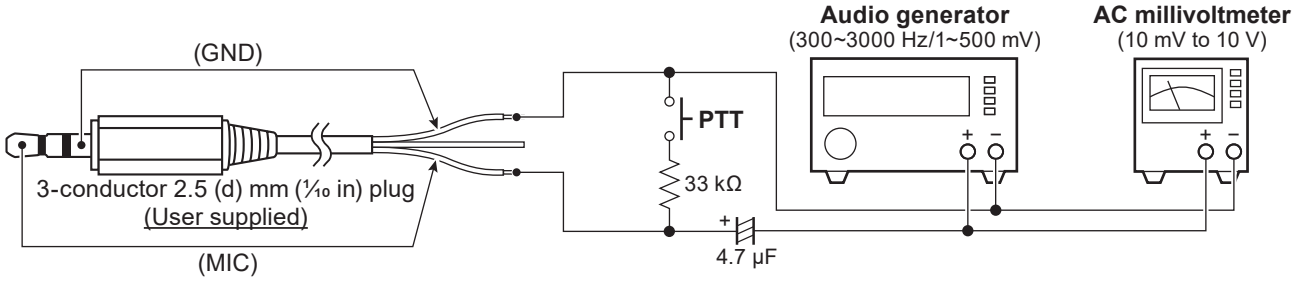

[JIG cable 2]

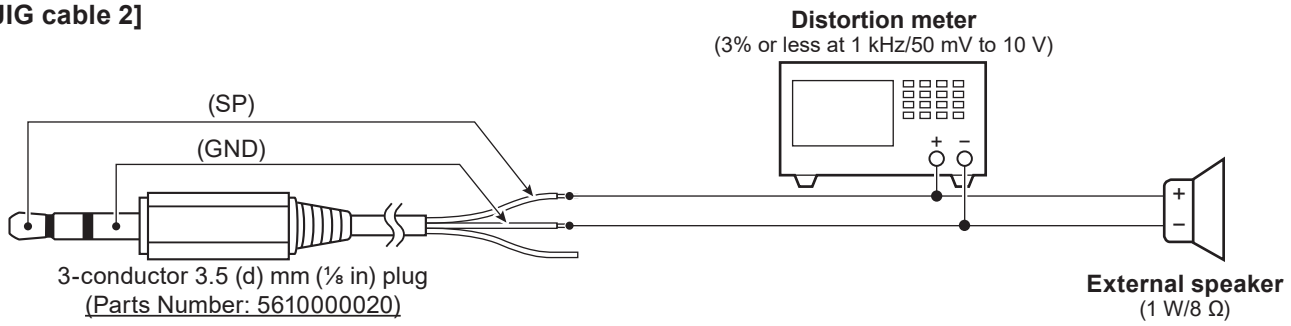

The underlined parts have been updated from the previous version of the addendum, or from the original page.

ENTERING THE ADJUST MODE

1. Turn OFF the power.
2. Connect the JIG plug to the [SP] connector.

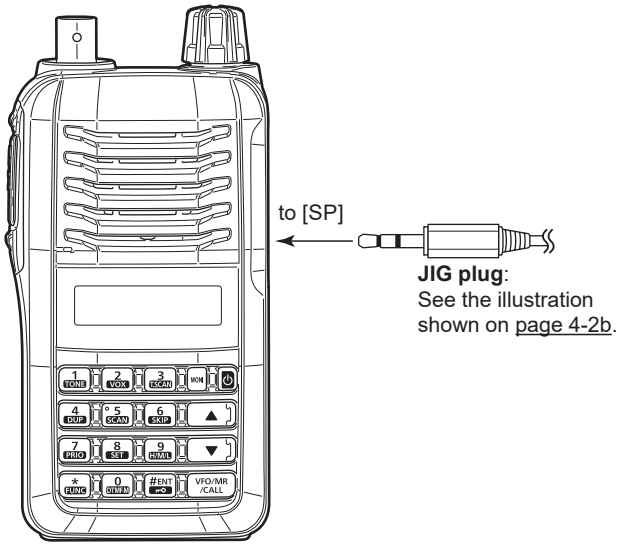

3. While holding down all [▲]/[▼] and [VFO/MR/CALL], turn ON the transceiver power to enter the adjust mode.

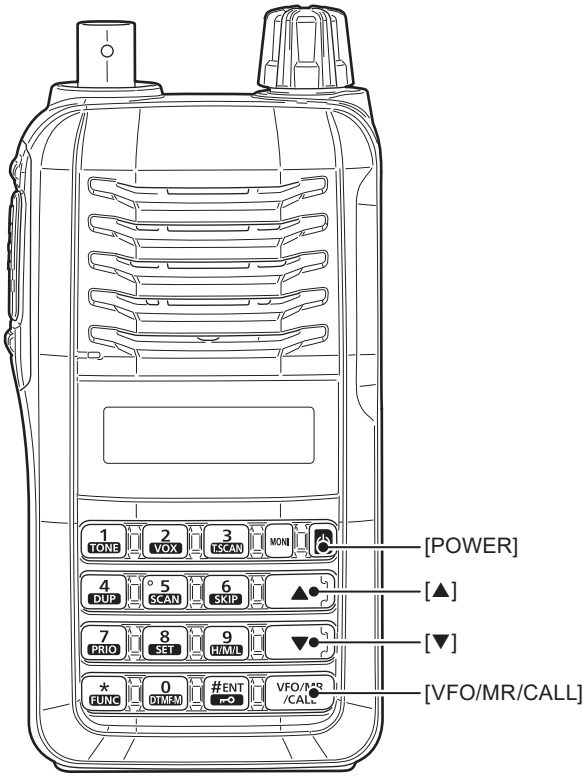

4. The adjust mode is displayed.

KEY ASSIGNMENTS FOR THE ADJUST MODE

- Push [▲] to select the next adjustment item, push [▼] to select the previous adjustment item.
- Rotate [VOL] to set or modify the adjustment value.
- Push [# ENT]•[⊶] to store the adjusted value, or start automatic adjustment.
- Push [*]•[FUNC] to briefly display the adjustment value.

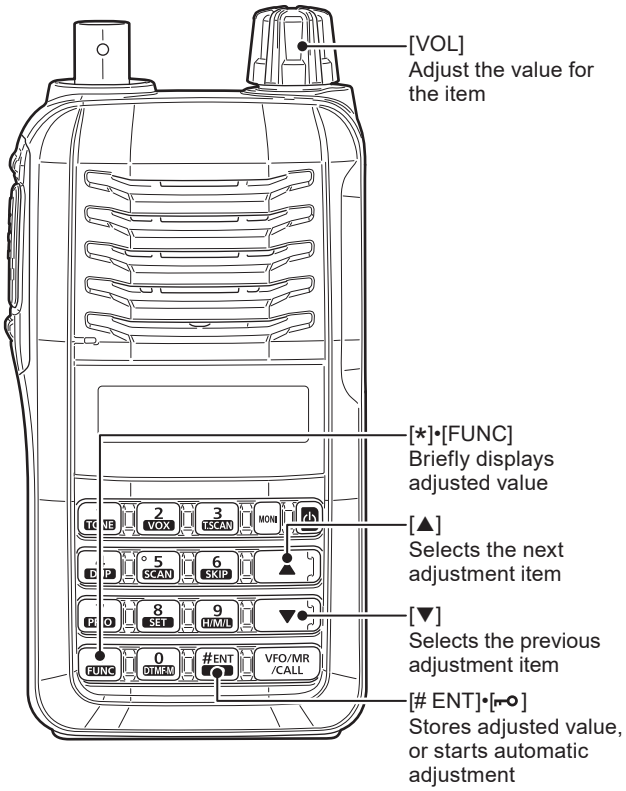

ADJUST MODE SCREENS

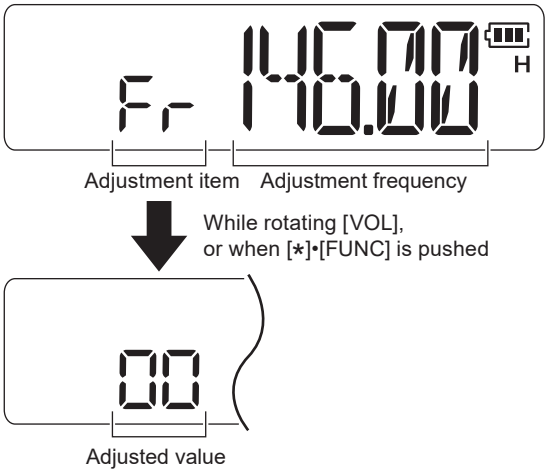

The underlined parts have been updated from the previous version of the addendum, or from the original page.

4-2 TRANSMIT ADJUSTMENTS

ADJUSTMENT		ADJUSTMENT ITEM DISPLAY	SETTING CONDITION	OPERATION
FREQUENCY -Verification-	1	Fr 146.00 H	• Connect the RF power meter or the dummy load to the antenna connector. • Loosely couple the frequency counter to the antenna connector. • Transmitting	145.999635 ~ 146.000365 MHz (If out of the specified range, adjust the frequency by [VOL], then push [# ENT]•[🔑].)
TRANSMIT OUTPUT POWER -Adjustment- (Extra High)	1	P0 144.00 EXH	• Connect the RF power meter to the antenna connector. • While transmitting, adjust the connected DC power supply voltage to 7.5 V. • Transmitting	Set the transmit output power to 7.0 W (within ±0.2 W) by [VOL], then push [# ENT]•[🔑]. Note the adjusted value as the reference value A.
(High)	2	P0 144.00 H		Set the transmit output power to 5.5 W (within ±0.2 W) by [VOL], then push [# ENT]•[🔑]. Note the adjusted value as the reference value B.
(Middle)	3	P0 144.00 M		Set the transmit output power to 2.5 W (within ±0.2 W) by [VOL], then push [# ENT]•[🔑]. Note the adjusted value as the reference value C.
(Low)	4	P0 144.00 L		Set the transmit output power to 0.5 W (within ±0.1 W) by [VOL], then push [# ENT]•[🔑]. Note the adjusted value as the reference value D.
(Extra High)	5	P1 136.00 EXH	• Receiving	Set the adjustment value to the value that add 4 to the reference value B, then push [# ENT]•[🔑].
	6	P0 160.00 EXH		Set the adjustment value to the value that subtract 5 to the reference value A, then push [# ENT]•[🔑].
	7	P2 174.00 EXH		Set the adjustment value to the value that subtract 1 to the reference value B, then push [# ENT]•[🔑].
(High)	8	P3 136.00 H		Set the adjustment value to the value that add 4 to the reference value B, then push [# ENT]•[🔑].
	9	P0 160.00 H		Set the adjustment value to the value that subtract 7 to the reference value B, then push [# ENT]•[🔑].
	10	P4 174.00 H		Set the adjustment value to the value that subtract 1 to the reference value B, then push [# ENT]•[🔑].
(Middle)	11	P5 136.00 M		Set the adjustment value to the value that add 1 to the reference value C, then push [# ENT]•[🔑].
	12	P0 160.00 M		Set the adjustment value to the value that subtract 3 to the reference value C, then push [# ENT]•[🔑].
	13	P6 174.00 M		Set the adjustment value to the value that add 4 to the reference value C, then push [# ENT]•[🔑].
(Low)	14	P7 136.00 L		Set the adjustment value to the value that add 1 to the reference value D, then push [# ENT]•[🔑].
	15	P0 160.00 L		Set the adjustment value to the reference value D, then push [# ENT]•[🔑].
	16	P8 174.00 L		Set the adjustment value to the value that add 5 to the reference value D, then push [# ENT]•[🔑].

The underlined parts have been updated from the previous version of the addendum, or from the original page.

4-2 TRANSMIT ADJUSTMENTS (CONTINUED)

ADJUSTMENT		ADJUSTMENT ITEM DISPLAY	SETTING CONDITION	OPERATION
TRANSMIT OUTPUT POWER -Verification- (Extra High)	1	P1 136.00 EXH	• Connect the RF power meter to the antenna connector. • While transmitting, adjust the connected DC power supply voltage to 7.5 V. • Transmitting	4.5~6.5 W (If out of the specified range, adjust the output power by [VOL], then push [# ENT]•[⊸].)
	2	P0 160.00 EXH		6.0~8.0 W (If out of the specified range, adjust the output power by [VOL], then push [# ENT]•[⊸].)
	3	P2 174.00 EXH		4.5~6.5 W (If out of the specified range, adjust the output power by [VOL], then push [# ENT]•[⊸].)
(High)	4	P3 136.00 H		
	5	P0 160.00 H		
	6	P4 174.00 H		
(Middle)	7	P5 136.00 M		2.0~3.0 W (If out of the specified range, adjust the output power by [VOL], then push [# ENT]•[⊸].)
	8	P0 160.00 M		
	9	P6 174.00 M		
(Low)	10	P7 136.00 L		0.25~1.5 W (If out of the specified range, adjust the output power by [VOL], then push [# ENT]•[⊸].)
	11	P0 160.00 L		
	12	P8 174.00 L		
TRANSMITTING CURRENT -Verification-	1	P1 136.00 EXH	• Connect the ammeter between the JIG battery case and the DC power supply. • Transmitting	Less than 2.0 A
	2	P0 144.00 EXH		
	3	P0 160.00 EXH		
	4	P2 174.00 EXH		
SPURIOUS EMISSION -Verification-	1	P1 136.00 EXH	• Connect the spectrum analyzer to the antenna connector through the attenuator. • Transmitting	Less than −60 dBc
	2	P0 144.00 EXH		
	3	P0 160.00 EXH		
	4	P2 174.00 EXH		

The underlined parts have been updated from the previous version of the addendum, or from the original page.

4-2 TRANSMIT ADJUSTMENTS (CONTINUED)

ADJUSTMENT		ADJUSTMENT ITEM DISPLAY	SETTING CONDITION	OPERATION
MODULATION SENSITIVITY -Verification-	1		• Connect the modulation analyzer to the antenna connector through the attenuator and set it to: HPF: OFF LPF: 20 kHz or 15 kHz De-emphasis: OFF Detector: (P−P)/2 • Connect the audio generator and the AC millivoltmeter to [MIC] through the JIG cable 1,and set it to: Frequency: 1 kHz Waveform: Sine wave Level: Adjust to the level so that the modulation analyzer shows ±1.50 kHz of deviation • Transmitting	10.0~20.0 mV (Audio generator output level)
TRANSMIT S/N RATIO -Verification-	1		• Set the modulation analyzer to: HPF: 50 Hz LPF: 3 kHz De-emphasis: ON Detector: (P−P)/2 • Set the audio generator output level so that the modulation analyzer shows ±1.50 kHz of deviation. • Transmitting • Toggle the audio generator output ON and OFF.	More than 34 dB

The underlined parts have been updated from the previous version of the addendum, or from the original page.

4-3 RECEIVE ADJUSTMENTS

ADJUSTMENT		ADJUSTMENT ITEM DISPLAY	SETTING CONDITION	OPERATION
NOISE SQUELCH -Adjustment-	1	SQ 146.02	• Connect the standard signal generator (SSG) to the antenna connector and set it to: Frequency: 146.020 MHz Modulation: 1 kHz Deviation: ±1.5 kHz Level*: −17 dBμV (–124 dBm) • Receiving	Push [# ENT]•[⊶]. (Automatic adjustment)
S-METER -Adjustment-	1	SL 146.02	• Set the SSG as: Level*: −13 dBμV (–120 dBm) • Receiving	Push [# ENT]•[⊶]. (Automatic adjustment)
RECEIVE SENSITIVITY -Verification-	1	t1 136.02	• Connect the distortion meter and the external speaker to [SP] through the JIG cable 2. • Set the SSG as: Frequency: 136.020 MHz Level: Set to the level so that the distortion meter shows 12 dB SINAD. • Receiving	Less than −10 dBμV* (−117 dBm) (SSG output level)
	2	t2 155.02	• Set the SSG as: Frequency: 155.020 MHz Level: Set to the level so that the distortion meter shows 12 dB SINAD. • Receiving	
	3	t3 173.98	• Set the SSG as: Frequency: 173.980 MHz Level: Set to the level so that the distortion meter shows 12 dB SINAD. • Receiving	
AUDIO OUTPUT LEVEL -Verification-	1	t2 155.02	• Set the SSG as: Frequency: 155.020 MHz Level*: +60 dBμV (−47 dBm) • Receiving • Adjust the audio output level so that the distortion meter shows 5% of distortion.	More than 0.45 W (More than 1.90 V)
RECEIVE S/N RATIO -Verification-	1	t2 155.02	• Receiving • Adjust the audio output level so that the distortion meter shows 1.34 V. • Toggle the SSG's modulation ON and OFF.	More than 34 dB
	2	t1 136.02	• Set the SSG as: Frequency: 136.020 MHz • Receiving	
	3	t3 173.98	• Set the SSG as: Frequency: 173.980 MHz • Receiving	
RECEIVING CURRENT -Verification- (Maximum audio)	1	t3 173.98	• Connect the ammeter between the JIG battery case and the DC power supply. • Set the SSG modulation ON. • Receiving • Adjust the audio output to the maximum level.	Less than 0.6 A
(Stand-by)	2		• No optional unit is connected. • No RF signal is received. • Squelch closed.	Less than 80 mA
<u>For only IC-V86 and IC-V86-T:</u> DEFAULT BATTERY PACK SETTING	1	bt 146.00	–	Select 01 (Ni-MH for [#13]) or 02 (Li-ion for [#11], [#12], and [#31]) by [VOL], then push [# ENT]•[⊶].

*The output level of the standard signal generator (SSG) is measured at the load end (PD).

SECTION 5 PARTS LIST

The underlined parts have been updated from the previous version of the addendum, or from the original page.

[MAIN UNIT] (for IC-V86 and IC-V86-T)

REF NO.	PART NO.	DESCRIPTION		M.	H/V LOCATION
IC1	1110007010	S.IC	NJM12904R-TE1	B	34.7/29.4
IC3	1110010000	S.IC	AT1846S	B	47.4/16.1
IC400	1130019660	S.IC	BR24G128NUX-5TR	B	92.2/14.0
Eqv.	1130019950	S.IC	BR24G128NUX-3ATTR		
IC402	1140018490	S.IC	STM32L073VBT6	B	81.0/20.5
IC403	1110007780	S.IC	NJU7704F3-28A-TE1	B	75.4/8.2
IC701	1110007630	S.IC	NJM2783V-TE1	T	39.6/41.5
IC702	1110010010	S.IC	U2429G-S08-R	B	23.1/36.7
IC706	1110008450	S.IC	ISD8102SYI T&R	T	22.5/35.4
IC707	6910027810	S.DC	TPS561201DDCR	B	51.4/41.1
IC817	1110010140	S.IC	TLV9002IDGKR	B	31.2/36.7
IC818	1180004950	S.REG	XC6701B502MR-G	T	7.4/29.0
IC819	1110008890	S.IC	NJU7056F3-TE2	T	20.2/29.7
IC820	1130007021	S.IC	TC7S66FU(TE85LF)	B	52.8/32.2
Q2	1590005410	S.TRA	DTC014YEBTL	B	42.2/31.7
Q4	1590005560	S.TRA	DTA014EEBTL	B	40.2/31.3
Q6	1530003322	S.TRA	2SC5108-YLF	B	37.6/8.0
Q7	1560002420	S.FET	RD01MUS2B-T513	B	37.2/15.8
Q8	1530003322	S.TRA	2SC5108-YLF	B	38.4/21.4
Q9	1560002460	S.FET	RD08MUS2-T512	B	29.6/13.4
Q10	1560002190	S.FET	RUM002N02T2L	B	39.2/28.0
Q12	1590005410	S.TRA	DTC014YEBTL	B	27.7/33.8
Q400	1530002851	S.TRA	2SC4116-BL(TE85RF)	B	64.2/3.5
Q401	1590005430	S.TRA	DTC044TEBTL	B	90.2/32.4
Q703	1590004220	S.TRA	DRA9123Y0L	B	21.6/45.8
Q704	1590005410	S.TRA	DTC014YEBTL	T	41.5/5.3
Q705	1590005410	S.TRA	DTC014YEBTL	B	18.1/41.0
Q706	1590004590	S.TRA	DMC506010R	B	14.5/42.1
Q707	1520001010	S.TRA	2SB1132G-R-AB3-R	B	10.1/41.3
Q711	1590005410	S.TRA	DTC014YEBTL	B	17.2/39.4
Q712	1590005410	S.TRA	DTC014YEBTL	B	73.1/38.1
Q716	1590005410	S.TRA	DTC014YEBTL	B	37.4/44.0
Q717	1510001270	S.TRA	2SAR502UBTL	B	37.3/39.7
Q718	1590005410	S.TRA	DTC014YEBTL	T	35.5/36.2
Q720	1510001270	S.TRA	2SAR502UBTL	T	31.9/37.1
Q721	1590004230	S.TRA	LMUN5213DW1T1G	B	40.2/44.1
Q722	1550000590	S.FET	UT6401G-AG6-R	T	10.9/30.4
Q723	1560002190	S.FET	RUM002N02T2L	B	13.2/31.4
Q724	1560002190	S.FET	RUM002N02T2L	T	20.5/31.8
Q725	1560002190	S.FET	RUM002N02T2L	B	17.9/42.9
D2	1750001810	S.DIO	L1SS400T1G	B	40.4/25.8
D3	1790001830	S.VAR	AVR-M1005C270MTAAB	B	25.5/20.1
D4	1720000701	S.VAR	1SV305(TPH3F)	B	18.1/24.6
D5	1720000701	S.VAR	1SV305(TPH3F)	B	16.3/25.4
D6	1750003940	S.DIO	RN142SMT2R	B	17.5/14.6
D7	1750003940	S.DIO	RN142SMT2R	B	15.7/20.4
D8	1750003940	S.DIO	RN142SMT2R	B	15.7/21.6
D9	1750003830	S.DIO	RB751CM-40T2R	B	15.0/22.8
D12	1750001810	S.DIO	L1SS400T1G	B	74.4/5.4
D13	1750003940	S.DIO	RN142SMT2R	B	17.5/15.8
D400	1750001810	S.DIO	L1SS400T1G	B	94.7/28.1
D401	1750001810	S.DIO	L1SS400T1G	B	94.7/25.7
D402	1750001810	S.DIO	L1SS400T1G	B	94.7/24.5
D404	1750001810	S.DIO	L1SS400T1G	B	94.7/26.9
D405	1750001810	S.DIO	L1SS400T1G [#12]	T	57.3/46.9
	1750001810	S.DIO	L1SS400T1G [#31]		
D407	1750001810	S.DIO	L1SS400T1G	T	59.9/46.9
D408	1750001810	S.DIO	L1SS400T1G	B	94.7/29.3
D409	1750001810	S.DIO	L1SS400T1G	B	92.2/26.9
D410	1750001810	S.DIO	L1SS400T1G	B	92.2/24.5
D411	1750001810	S.DIO	L1SS400T1G	B	92.2/22.4
D413	1750001820	S.DIO	LRB706F-40T1G	B	92.8/31.9
D700	1750003390	S.ZEN	RCLAMP1521P.TCT	T	8.4/34.9
D705	1750001810	S.DIO	L1SS400T1G	B	36.6/36.8
D706	1750001810	S.DIO	L1SS400T1G	B	35.9/34.9
D708	1750001810	S.DIO	L1SS400T1G	T	16.6/39.1
D711	1750003830	S.DIO	RB751CM-40T2R	B	73.4/40.2
D714	1750003830	S.DIO	RB751CM-40T2R	B	72.0/39.7
D717	1750001810	S.DIO	L1SS400T1G	B	10.5/31.0
D719	1750001810	S.DIO	L1SS400T1G	B	16.0/45.2
X2	6050014880	S.XTA	CR-1079 (13 MHz)	B	61.9/8.9
X400	6050014200	S.XTA	CR-1021 (12.288 MHz)	B	82.5/7.3
L3	6200013820	S.COI	MLK1005S27NJT	B	36.7/9.5
L4	6200013830	S.COI	MLK1005S22NJT	B	33.3/12.3
L5	6200017370	S.COI	SDWL1608CR10GSTF 0.1U	B	38.8/23.3
L6	6200012540	S.COI	0.30-1.2-5TR 16.1N	B	24.1/15.8
L7	6200013010	S.COI	0.30-0.9-5TL 10.3N	B	23.8/13.3
L8	6200017390	S.COI	SDWL1608C47NJSTF 47N	B	19.6/24.6
L9	6200012390	S.COI	0.30-0.92-3TR 5.8N	B	21.3/13.2
L10	6200012470	S.COI	0.30-1.7-7TL 45.3N	B	20.5/10.8
L11	6200017560	S.COI	NLV25T-R82J-EF	T	20.8/16.5
L12	6200017390	S.COI	SDWL1608C47NJSTF 47N	B	13.7/24.2
L13	6200013820	S.COI	MLK1005S27NJT	B	21.8/24.2
L15	6200012470	S.COI	0.30-1.7-7TL 45.3N	B	11.6/18.7
L16	6200012470	S.COI	0.30-1.7-7TL 45.3N	B	17.3/18.1
L17	6200012760	S.COI	0.35-1.6-7TL 37.5N	B	7.5/18.2
L18	6200012780	S.COI	0.30-1.4-6TL 27.2N	B	9.2/13.7

Eqv.= This component is equivalent to the REF No. component listed above, and may be substituted on parts orders and repairs.

REF NO.	PART NO.	DESCRIPTION		M.	H/V LOCATION
L19	6200003640	S.COI	MLF1608E 100K-T	B	43.4/10.6
L22	6200003960	S.COI	MLF1608A 1R0K-T	B	62.0/11.6
L702	6200017010	S.COI	VLS252012CX-100M-1	B	52.2/38.2
L705	6200017010	S.COI	VLS252012CX-100M-1	B	46.4/39.7
R1	7510001730	S.THE	ERTJ0EP 473J	T	22.0/6.6
R2	7030014860	S.RES	RGC1/16SC104DTH (100 k)	T	21.6/5.3
R4	7030021060	S.RES	MCR25JZHFL R150 (0.15)	B	29.4/26.9
R8	7030015520	S.RES	RMC1/16JPTP	B	65.4/9.2
R10	7030016550	S.RES	RMC1/16SK154FTH (150 k)	B	31.5/26.4
R11	7030016560	S.RES	RMC1/16SJPTH	B	61.5/10.5
R12	7030016550	S.RES	RMC1/16SK154FTH (150 k)	B	29.8/30.1
R13	7030017370	S.RES	RGC1/16SC183DTH (18 k)	B	31.5/28.0
R14	7030015980	S.RES	RMC1/16S-333JTH (33 k)	B	38.7/31.5
R16	7030016030	S.RES	RMC1/16S-154JTH (150 k)	B	36.7/31.8
R17	7030015990	S.RES	RMC1/16S-683JTH (68 k)	B	36.7/32.7
R18	7030015960	S.RES	RMC1/16S-472JTH (4.7 k)	B	76.5/4.4
R19	7030015960	S.RES	RMC1/16S-472JTH (4.7 k)	B	76.5/5.4
R20	7030016740	S.RES	RMC1/16SK474DTH (470 k)	B	31.6/30.1
R21	7030016740	S.RES	RMC1/16SK474DTH (470 k)	B	33.0/27.2
R23	7030016360	S.RES	RMC1/16S-123JTH (12 k)	B	33.0/25.6
R24	7030015900	S.RES	RMC1/16S-470JTH (47)	B	52.9/17.9
R26	7030016030	S.RES	RMC1/16S-154JTH (150 k)	B	37.7/30.0
R27	7030016050	S.RES	RMC1/16S-102JTH (1 k)	B	50.9/14.6
R28	7030017370	S.RES	RGC1/16SC183DTH (18 k)	B	30.7/30.1
R30	7030016050	S.RES	RMC1/16S-102JTH (1 k)	B	37.7/28.4
R32	7030016120	S.RES	RMC1/16S-682JTH (6.8 k)	B	40.9/27.7
R33	7030016110	S.RES	RMC1/16S-473JTH (47 k)	B	43.2/18.0
R36	7030015910	S.RES	RMC1/16S-101JTH (100)	B	39.5/9.1
R37	7030016120	S.RES	RMC1/16S-682JTH (6.8 k)	B	39.0/7.9
R38	7030016150	S.RES	RMC1/16S-100JTH (10)	B	35.8/7.2
R41	7030016180	S.RES	RMC1/16S-680JTH (68)	B	38.1/11.1
R42	7030016510	S.RES	RMC1/16S-4R7JTH (4.7)	B	38.2/12.3
R44	7030016190	S.RES	RMC1/16S-273JTH (27 k)	B	39.5/11.9
R45	7030016250	S.RES	RMC1/16S-220JTH (22)	B	38.5/24.6
R46	7030015920	S.RES	RMC1/16S-221JTH (220)	B	36.7/23.3
R47	7030015910	S.RES	RMC1/16S-101JTH (100)	B	36.4/21.7
R48	7030016090	S.RES	RMC1/16S-223JTH (22 k)	B	39.5/12.8
R49	7030016390	S.RES	RMC1/16S-184JTH (180 k)	B	37.8/19.9
R50	7030016390	S.RES	RMC1/16S-184JTH (180 k)	B	36.2/19.9
R51	7030016250	S.RES	RMC1/16S-220JTH (22)	B	32.1/9.3
R52	7030016300	S.RES	RMC1/16S-332JTH (3.3 k)	B	30.9/7.2
R53	7030016000	S.RES	RMC1/16S-823JTH (82 k)	B	30.9/8.1
R55	7030016290	S.RES	RMC1/16S-222JTH (2.2 k)	B	17.5/26.4
R56	7030016050	S.RES	RMC1/16S-102JTH (1 k)	B	17.1/27.6
R57	7030016290	S.RES	RMC1/16S-222JTH (2.2 k)	B	15.9/26.4
R58	7030016370	S.RES	RMC1/16S-271JTH (270)	T	21.9/19.2
R59	7030016370	S.RES	RMC1/16S-271JTH (270)	T	21.0/19.2
R60	7030015990	S.RES	RMC1/16S-683JTH (68 k)	T	14.6/9.0
R67	7030016110	S.RES	RMC1/16S-473JTH (47 k)	B	40.1/29.4
R400	7030016290	S.RES	RMC1/16S-222JTH (2.2 k)	B	64.6/5.3
R401	7030016440	S.RES	RMC1/16S-272JTH (2.7 k)	B	66.5/4.9
R402	7030016110	S.RES	RMC1/16S-473JTH (47 k)	B	92.7/19.8
R403	7030016110	S.RES	RMC1/16S-473JTH (47 k)	B	92.2/18.6
R404	7030016050	S.RES	RMC1/16S-102JTH (1 k)	B	92.1/28.0
R405	7030016050	S.RES	RMC1/16S-102JTH (1 k)	B	91.9/25.7
R406	7030016050	S.RES	RMC1/16S-102JTH (1 k)	B	92.6/23.5
R407	7030016050	S.RES	RMC1/16S-102JTH (1 k)	B	92.5/21.4
R409	7030015970	S.RES	RMC1/16S-103JTH (10 k)	B	90.1/15.8
R410	7030015970	S.RES	RMC1/16S-103JTH (10 k)	B	72.0/12.3
R411	7030015970	S.RES	RMC1/16S-103JTH (10 k)	B	72.0/13.3
R412	7030015960	S.RES	RMC1/16S-472JTH (4.7 k)	B	91.5/17.4
R413	7030015960	S.RES	RMC1/16S-472JTH (4.7 k)	B	92.4/17.4
R416	7030015900	S.RES	RMC1/16S-470JTH (47)	B	79.1/10.0
R417	7030015900	S.RES	RMC1/16S-470JTH (47)	B	78.2/10.0
R421	7030016060	S.RES	RMC1/16S-105JTH (1 M)	B	81.3/10.5
R425	7030016110	S.RES	RMC1/16S-473JTH (47 k)	B	89.4/9.6
R426	7030016330	S.RES	RMC1/16S-153JTH (15 k)	B	90.8/30.8
R427	7030016830	S.RES	RGC1/16SC153DTH (15.0 k)	B	92.3/30.0
R428	7030016560	S.RES	RMC1/16SJPTH	B	69.6/17.9
R429	7030015970	S.RES	RMC1/16S-103JTH (10 k)	B	73.5/7.9
R430	7030016180	S.RES	RMC1/16S-680JTH (68)	B	66.0/3.3
R702	7030016500	S.RES	RMC1/16S-562JTH (5.6 k)	B	29.9/33.9
R703	7030016000	S.RES	RMC1/16S-823JTH (82 k)	B	31.1/34.4
R704	7030016110	S.RES	RMC1/16S-473JTH (47 k)	B	33.4/34.5
R705	7030016110	S.RES	RMC1/16S-473JTH (47 k)	B	34.6/34.8
R706	7030015930	S.RES	RMC1/16S-471JTH (470)	B	23.1/45.6
R708	7030015980	S.RES	RMC1/16S-333JTH (33 k)	B	27.7/36.2
R712	7030016190	S.RES	RMC1/16S-273JTH (27 k)	B	21.4/44.2
R713	7030016110	S.RES	RMC1/16S-473JTH (47 k)	B	21.4/43.0
R715	7030015980	S.RES	RMC1/16S-333JTH (33 k)	T	37.9/2.5
R716	7030015970	S.RES	RMC1/16S-103JTH (10 k)	B	21.2/31.9
R717	7030015970	S.RES	RMC1/16S-103JTH (10 k)	B	20.2/40.2
R720	7030016050	S.RES	RMC1/16S-102JTH (1 k)	B	16.6/43.2
R721	7030016110	S.RES	RMC1/16S-473JTH (47 k)	B	14.5/44.1
R723	7030015970	S.RES	RMC1/16S-103JTH (10 k)	B	37.3/35.7
R724	7030016020	S.RES	RMC1/16S-104JTH (100 k)	B	37.7/34.5
R725	7030016340	S.RES	RMC1/16S-393JTH (39 k)	T	36.3/42.6
R726	7030015980	S.RES	RMC1/16S-333JTH (33 k)	T	40.9/35.4
R727	7030016350	S.RES	RMC1/16S-122JTH (1.2 k)	T	40.0/35.9
R728	7030016050	S.RES	RMC1/16S-102JTH (1 k)	T	40.0/34.3
R729	7030015910	S.RES	RMC1/16S-101JTH (100)	T	22.6/38.7
R731	7030016050	S.RES	RMC1/16S-102JTH (1 k)	B	16.5/41.5
R732	7030015970	S.RES	RMC1/16S-103JTH (10 k)	T	39.6/46.1

M.=Mounted side (T: Mounted on the Top side, B: Mounted on the Bottom side)
H/V LOCATION=See the BOARD LAYOUTS for details.

The underlined parts have been updated from the previous version of the addendum, or from the original page.

[MAIN UNIT] (for IC-V86 and IC-V86-T)

REF NO.	PART NO.	DESCRIPTION		M.	H/V LOCATION
R733	7030016030	S.RES	RMC1/16S-154JTH (150 k)	B	34.8/37.4
R734	7030016340	S.RES	RMC1/16S-393JTH (39 k)	T	41.3/37.2
R735	7030016050	S.RES	RMC1/16S-102JTH (1 k)	B	36.1/37.8
R738	7030016050	S.RES	RMC1/16S-102JTH (1 k)	B	13.9/40.3
R739	7030016330	S.RES	RMC1/16S-153JTH (15 k)	B	15.5/40.3
R740	7030016910	S.RES	RGC1/16SC393DTH (39 k)	T	8.7/31.7
R742	7030016330	S.RES	RMC1/16S-153JTH (15 k)	B	38.8/37.9
R745	7030016430	S.RES	RMC1/16S-392JTH (3.9 k)	B	15.5/39.4
R746	7030016830	S.RES	RGC1/16SC153DTH (15.0 k)	T	8.7/33.3
R750	7030016330	S.RES	RMC1/16S-153JTH (15 k)	B	39.5/36.3
R751	7030016020	S.RES	RMC1/16S-104JTH (100 k)	T	17.6/37.2
R752	7030016020	S.RES	RMC1/16S-104JTH (100 k)	T	16.3/38.0
R753	7030016020	S.RES	RMC1/16S-104JTH (100 k)	B	18.6/38.1
R759	7030015970	S.RES	RMC1/16S-103JTH (10 k)	B	47.1/42.1
R762	7030016810	S.RES	RGC1/16SC392DTH (3.90 k)	B	50.9/43.5
R763	7030017510	S.RES	RGC1/16SC272DTH (2.7 k)	B	52.5/43.5
R765	7030016050	S.RES	RMC1/16S-102JTH (1 k)	B	25.8/40.8
R767	7030016880	S.RES	RGC1/16SC223DTH (22.0 k)	B	50.9/44.4
R771	7030016110	S.RES	RMC1/16S-473JTH (47 k)	B	37.1/41.6
R773	7030016050	S.RES	RMC1/16S-102JTH (1 k)	B	37.1/42.5
R780	7030016110	S.RES	RMC1/16S-473JTH (47 k)	T	33.8/37.4
R781	7030016050	S.RES	RMC1/16S-102JTH (1 k)	T	35.0/37.7
R784	7030015960	S.RES	RMC1/16S-472JTH (4.7 k)	B	42.0/40.0
R785	7030015950	S.RES	RMC1/16S-152JTH (1.5 k)	B	41.5/42.4
R786	7030016410	S.RES	RMC1/16S-561JTH (560)	B	41.5/41.5
R787	7030016020	S.RES	RMC1/16S-104JTH (100 k)	B	41.1/40.0
R788	7030015970	S.RES	RMC1/16S-103JTH (10 k)	T	36.9/38.3
R789	7030016040	S.RES	RMC1/16S-224JTH (220 k)	T	37.9/37.1
R790	7030016020	S.RES	RMC1/16S-104JTH (100 k)	T	13.1/31.0
R791	7030016020	S.RES	RMC1/16S-104JTH (100 k)	T	14.0/31.0
R795	7030015980	S.RES	RMC1/16S-333JTH (33 k)	B	23.3/30.4
R796	7030016000	S.RES	RMC1/16S-823JTH (82 k)	B	21.6/30.0
R797	7030016110	S.RES	RMC1/16S-473JTH (47 k)	T	20.3/28.0
R798	7030016110	S.RES	RMC1/16S-473JTH (47 k)	T	21.9/28.0
R799	7030016060	S.RES	RMC1/16S-105JTH (1 M)	B	11.7/30.0
R800	7030016060	S.RES	RMC1/16S-105JTH (1 M)	B	11.7/29.1
R801	7030015950	S.RES	RMC1/16S-152JTH (1.5 k)	B	23.0/47.2
R803	7030015950	S.RES	RMC1/16S-152JTH (1.5 k)	B	31.1/33.5
R804	7030015990	S.RES	RMC1/16S-683JTH (68 k)	B	20.4/29.6
R805	7030016020	S.RES	RMC1/16S-104JTH (100 k)	T	17.9/30.3
R806	7030016060	S.RES	RMC1/16S-105JTH (1 M)	B	50.0/31.9
R807	7030016060	S.RES	RMC1/16S-105JTH (1 M)	B	50.9/32.6
R808	7030016110	S.RES	RMC1/16S-473JTH (47 k)	B	34.3/32.6
R809	7030015910	S.RES	RMC1/16S-101JTH (100)	T	19.2/32.2
R810	7030016020	S.RES	RMC1/16S-104JTH (100 k)	T	17.9/32.2
R811	7030016060	S.RES	RMC1/16S-105JTH (1 M)	B	18.4/44.3
R812	7030016060	S.RES	RMC1/16S-105JTH (1 M)	B	19.3/42.8
C4	4030022140	S.CER	GRM033B31H102KA12D	B	28.6/30.1
C19	4030022140	S.CER	GRM033B31H102KA12D	B	37.8/32.1
C20	4030022100	S.CER	GRM0332C1H100JA01D	B	32.8/26.4
C22	4030022140	S.CER	GRM033B31H102KA12D	B	50.2/19.5
C23	4030022160	S.CER	GRM033B31A104KE84D	B	35.7/27.1
C24	4030022160	S.CER	GRM033B31A104KE84D	B	50.8/19.5
C25	4030022260	S.CER	GRM033R60J105MEA2D	T	42.3/8.9
C26	4030022160	S.CER	GRM033B31A104KE84D	B	38.5/30.1
C28	4030022160	S.CER	GRM033B31A104KE84D	B	47.0/12.0
C29	4030022140	S.CER	GRM033B31H102KA12D	B	47.0/12.6
C32	4030022160	S.CER	GRM033B31A104KE84D	B	47.9/12.3
C33	4030022160	S.CER	GRM033B31A104KE84D	B	45.1/12.8
C35	4030022140	S.CER	GRM033B31H102KA12D	B	45.1/12.2
C36	4030022260	S.CER	GRM033R60J105MEA2D	B	39.3/26.7
C37	4550007520	S.TAN	F931A106MAABMA	B	44.6/8.9
Eqv.	4550009370	S.TAN	267E1002106MR533		
C38	4030022090	S.CER	GRM0332C1H330JA01D	B	39.9/7.9
C42	4030022140	S.CER	GRM033B31H102KA12D	B	36.0/8.0
C45	4030022140	S.CER	GRM033B31H102KA12D	B	36.0/8.6
C46	4030022080	S.CER	GRM0332C1H101JA01D	B	37.9/9.9
C47	4030022140	S.CER	GRM033B31H102KA12D	B	39.5/11.1
C49	4030022140	S.CER	GRM033B31H102KA12D	B	36.6/22.5
C52	4030022120	S.CER	GRM0332C1H470JA01D	B	39.8/20.2
C53	4030022140	S.CER	GRM033B31H102KA12D	B	34.3/11.8
C54	4030022140	S.CER	GRM033B31H102KA12D	B	36.6/20.9
C57	4030026690	S.CER	RF15N100G500CT	B	34.2/14.8
C58	4030023090	S.CER	0402B102K500CT	B	26.1/17.5
C59	4030022920	S.CER	0402N820J500CT	B	33.5/13.5
C62	4030022740	S.CER	0402N220J500CT	B	20.9/24.2
C64	4030022140	S.CER	GRM033B31H102KA12D	B	31.1/8.9
C65	4030023450	S.CER	0603N100D500CT	B	22.9/10.9
C67	4030023700	S.CER	0603N390J500CT	B	24.1/10.9
C68	4030022640	S.CER	0402N101J500CT	B	19.1/26.4
C69	4030023500	S.CER	0603N150J500CT	B	20.9/7.5
C71	4030022160	S.CER	GRM033B31A104KE84D	B	16.1/27.9
C73	4030023090	S.CER	0402B102K500CT	B	18.8/13.6
C75	4030026740	S.CER	RF15N5R0B500CT	B	16.8/23.8
C76	4030023520	S.CER	0603N180J500CT	B	20.9/8.7
C79	4030022140	S.CER	GRM033B31H102KA12D	T	22.2/18.1
C81	4030026590	S.CER	RF15N180J500CT	B	18.8/12.7
C82	4030022640	S.CER	0402N101J500CT	B	14.0/26.5
C84	4030023090	S.CER	0402B102K500CT	B	14.9/16.8
C86	4030026570	S.CER	RF15N120J500CT	B	12.8/20.9
C88	4030026700	S.CER	RF15N1R0B500CT	B	12.4/16.8
C89	4030026590	S.CER	RF15N180J500CT	B	15.2/18.0
C90	4030026690	S.CER	RF15N100G500CT	B	15.4/24.1
C92	4030026710	S.CER	RF15N2R0B500CT	B	10.4/20.9
C93	4030026590	S.CER	RF15N180J500CT	B	15.1/19.3
C94	4030026750	S.CER	RF15N7R0C500CT	B	9.4/18.4
C95	4030022740	S.CER	0402N220J500CT	B	9.4/20.0
C101	4030022740	S.CER	0402N220J500CT	B	7.5/15.8
C109	4030022260	S.CER	GRM033R60J105MEA2D	B	63.6/8.5
C110	4030022260	S.CER	GRM033R60J105MEA2D	B	64.4/8.5

REF NO.	PART NO.	DESCRIPTION		M.	H/V LOCATION
C113	4030022140	S.CER	GRM033B31H102KA12D	B	61.2/12.8
C114	4030025320	S.CER	GRM0332C1H151JA01D	B	61.2/14.0
C115	4030022160	S.CER	GRM033B31A104KE84D	B	42.6/17.1
C116	4030022140	S.CER	GRM033B31H102KA12D	B	42.6/16.5
C117	4030022160	S.CER	GRM033B31A104KE84D	B	52.3/16.3
C118	4030022140	S.CER	GRM033B31H102KA12D	B	52.3/16.9
C120	4030026710	S.CER	RF15N2R0B500CT	B	43.5/14.8
C122	4030026710	S.CER	RF15N2R0B500CT	B	46.0/12.0
C124	4030026710	S.CER	RF15N2R0B500CT	T	40.7/16.2
C125	4030026690	S.CER	RF15N100G500CT	B	7.5/14.9
C126	4030026740	S.CER	RF15N5R0B500CT	B	7.4/12.1
C405	4030022160	S.CER	GRM033B31A104KE84D	B	71.8/19.6
C408	4030025440	S.CER	GRM0332C1E271JA01D	B	70.7/17.6
C409	4030022160	S.CER	GRM033B31A104KE84D	B	70.7/16.6
C410	4030022160	S.CER	GRM033B31A104KE84D	B	71.8/20.2
C411	4030022160	S.CER	GRM033B31A104KE84D	B	71.0/22.5
C412	4030022160	S.CER	GRM033B31A104KE84D	B	71.0/23.2
C413	4030025350	S.CER	GRM0332C1H120JA01D	B	80.3/7.8
C414	4030022160	S.CER	GRM033B31A104KE84D	B	70.4/15.1
C415	4030022160	S.CER	GRM033B31A104KE84D	B	71.0/26.5
C416	4030025350	S.CER	GRM0332C1H120JA01D	B	81.7/9.5
C417	4030022260	S.CER	GRM033R60J105MEA2D	B	76.8/9.7
C418	4030022160	S.CER	GRM033B31A104KE84D	B	76.8/10.3
C420	4030022260	S.CER	GRM033R60J105MEA2D	B	77.3/10.9
C421	4030022160	S.CER	GRM033B31A104KE84D	B	77.3/11.5
C425	4030025400	S.CER	GRM033R61A273KE84D	B	77.1/8.7
C426	4030022160	S.CER	GRM033B31A104KE84D	B	87.6/29.1
C427	4030022260	S.CER	GRM033R60J105MEA2D	B	84.8/11.1
C428	4030022160	S.CER	GRM033B31A104KE84D	B	90.1/14.0
C429	4550007520	S.TAN	F931A106MAABMA	B	80.5/36.5
Eqv.	4550009370	S.TAN	267E1002106MR533		
C430	4030022140	S.CER	GRM033B31H102KA12D	B	64.6/20.2
C437	4030022140	S.CER	GRM033B31H102KA12D	B	83.3/11.1
C446	4030022140	S.CER	GRM033B31H102KA12D	B	84.0/11.1
C451	4030022120	S.CER	GRM0332C1H470JA01D	B	62.6/17.3
C452	4030022120	S.CER	GRM0332C1H470JA01D	B	62.0/18.0
C453	4030022120	S.CER	GRM0332C1H470JA01D	B	71.8/24.5
C454	4030022120	S.CER	GRM0332C1H470JA01D	B	64.0/15.9
C455	4030022120	S.CER	GRM0332C1H470JA01D	B	65.0/15.9
C456	4030022120	S.CER	GRM0332C1H470JA01D	B	87.8/13.1
C457	4030022120	S.CER	GRM0332C1H470JA01D	B	65.9/17.0
C458	4030022120	S.CER	GRM0332C1H470JA01D	B	70.2/20.3
C459	4030022120	S.CER	GRM0332C1H470JA01D	B	64.5/24.1
C460	4030022120	S.CER	GRM0332C1H470JA01D	B	65.4/24.2
C461	4030022120	S.CER	GRM0332C1H470JA01D	B	70.0/22.3
C462	4030022120	S.CER	GRM0332C1H470JA01D	B	69.4/23.4
C463	4030022120	S.CER	GRM0332C1H470JA01D	B	70.8/24.4
C464	4030022120	S.CER	GRM0332C1H470JA01D	B	70.2/25.0
C465	4030022120	S.CER	GRM0332C1H470JA01D	B	72.0/25.8
C466	4030022120	S.CER	GRM0332C1H470JA01D	B	74.7/29.5
C467	4030022120	S.CER	GRM0332C1H470JA01D	B	74.6/33.1
C468	4030022120	S.CER	GRM0332C1H470JA01D	B	60.3/35.3
C469	4030022120	S.CER	GRM0332C1H470JA01D	B	61.3/35.5
C470	4030022120	S.CER	GRM0332C1H470JA01D	B	62.2/35.5
C471	4030022120	S.CER	GRM0332C1H470JA01D	B	63.2/35.5
C472	4030022120	S.CER	GRM0332C1H470JA01D	B	69.0/35.3
C473	4030022120	S.CER	GRM0332C1H470JA01D	B	62.7/37.2
C474	4030022120	S.CER	GRM0332C1H470JA01D	B	62.0/37.8
C475	4030022120	S.CER	GRM0332C1H470JA01D	B	77.4/36.4
C477	4030022120	S.CER	GRM0332C1H470JA01D	B	85.5/33.7
C700	4030022260	S.CER	GRM033R60J105MEA2D	B	24.5/47.1
C702	4030022960	S.CER	0402B333K100CT	B	32.0/32.5
C703	4030022260	S.CER	GRM033R60J105MEA2D	B	32.3/33.7
C707	4030022260	S.CER	GRM033R60J105MEA2D	B	34.5/34.0
C708	4030023190	S.CER	0402B392K500CT	B	26.8/36.2
C710	4030022160	S.CER	GRM033B31A104KE84D	B	22.2/43.2
C711	4030022260	S.CER	GRM033R60J105MEA2D	B	26.4/34.8
C724	4030022260	S.CER	GRM033R60J105MEA2D	T	39.0/2.3
C726	4030022160	S.CER	GRM033B31A104KE84D	B	20.3/44.2
C731	4030022260	S.CER	GRM033R60J105MEA2D	B	36.9/34.4
C734	4030022160	S.CER	GRM033B31A104KE84D	T	38.8/46.0
C735	4030022260	S.CER	GRM033R60J105MEA2D	B	13.7/43.9
C738	4030022260	S.CER	GRM033R60J105MEA2D	T	40.4/46.0
C740	4030022260	S.CER	GRM033R60J105MEA2D	B	34.9/36.2
C741	4030025440	S.CER	GRM0332C1E271JA01D	T	41.2/36.4
C742	4030022150	S.CER	GRM033B31E103KA12D	B	14.1/39.5
C744	4030022950	S.CER	0402B273K100CT	B	23.3/32.0
C745	4030022260	S.CER	GRM033R60J105MEA2D	T	39.2/37.3
C747	4030022260	S.CER	GRM033R60J105MEA2D	T	42.4/37.5
C748	4030022260	S.CER	GRM033R60J105MEA2D	B	37.5/37.8
C749	4030022260	S.CER	GRM033R60J105MEA2D	T	18.4/36.6
C750	4030022160	S.CER	GRM033B31A104KE84D	B	38.7/37.1
C752	4030022160	S.CER	GRM033B31A104KE84D	B	38.4/36.0
C753	4030022160	S.CER	GRM033B31A104KE84D	T	17.3/35.6
C755	4030022160	S.CER	GRM033B31A104KE84D	B	16.8/38.0
C756	4030022160	S.CER	GRM033B31A104KE84D	B	47.0/41.3
C759	4550008220	S.TAN	F931C106MAA	B	10.2/44.8
Eqv.	4550009180	S.TAN	267E1602106MR533		
C760	4030025550	S.CER	CL21A226MAQNNPE	B	48.8/41.0
C767	4520000020	S.NIO	NOJC227M006RWJV	T	28.5/35.2
C768	4030022260	S.CER	GRM033R60J105MEA2D	T	7.4/26.9
C769	4030022160	S.CER	GRM033B31A104KE84D	B	50.1/38.7
C772	4030022140	S.CER	GRM033B31H102KA12D	B	27.2/40.9
C774	4030022120	S.CER	GRM0332C1H470JA01D	B	26.6/40.9
C777	4030025550	S.CER	CL21A226MAQNNPE	B	54.8/41.1
C784	4030025440	S.CER	GRM0332C1E271JA01D	B	38.5/45.7
C792	4030025230	S.CER	TMK107BJ105KAHT	T	7.0/31.4
Eqv.	4030025510	S.CER	CL10B105KA8NNPC		
C793	4030025230	S.CER	TMK107BJ105KAHT	B	45.6/42.1
Eqv.	4030025510	S.CER	CL10B105KA8NNPC		
C794	4030025230	S.CER	TMK107BJ105KAHT	T	9.9/27.3
Eqv.	4030025510	S.CER	CL10B105KA8NNPC		

Eqv.= This component is equivalent to the REF No. component listed above, and may be substituted on parts orders and repairs.

M.=Mounted side (T: Mounted on the Top side, B: Mounted on the Bottom side)
H/V LOCATION=See the BOARD LAYOUTS for details.

The underlined parts have been updated from the previous version of the addendum, or from the original page.

[MAIN UNIT] (for IC-V86 and IC-V86-T)

REF NO.	PART NO.	DESCRIPTION		M.	H/V LOCATION
C798	4030022260	S.CER	GRM033R60J105MEA2D	B	40.3/40.2
C799	4030022260	S.CER	GRM033R60J105MEA2D	T	39.0/35.7
C800	4030022160	S.CER	GRM033B31A104KE84D	B	32.2/7.1
C802	4030022260	S.CER	GRM033R60J105MEA2D	T	18.4/31.3
C803	4030025320	S.CER	GRM0332C1H151JA01D	B	20.2/30.5
C804	4030022260	S.CER	GRM033R60J105MEA2D	T	21.9/29.3
C805	4030025370	S.CER	GRM033R61C104KE14D	B	12.0/31.3
C806	4030025320	S.CER	GRM0332C1H151JA01D	T	37.7/36.3
C807	4030022260	S.CER	GRM033R60J105MEA2D	T	39.0/35.1
C808	4030022260	S.CER	GRM033R60J105MEA2D	T	41.2/46.0
C809	4030022260	S.CER	GRM033R60J105MEA2D	T	39.0/36.3
C810	4030022260	S.CER	GRM033R60J105MEA2D	B	22.1/47.5
C811	4550007520	S.TAN	F931A106MAABMA	B	25.1/43.8
Eqv.	4550009370	S.TAN	267E1002106MR533		
C812	4030022260	S.CER	GRM033R60J105MEA2D	B	21.5/47.5
C813	4030023110	S.CER	0402B152K500CT	B	22.5/29.1
C814	4030022260	S.CER	GRM033R60J105MEA2D	B	50.9/31.1
C815	4030022160	S.CER	GRM033B31A104KE84D	B	33.2/32.9
C817	4030022260	S.CER	GRM033R60J105MEA2D	T	18.4/33.2
C818	4030022260	S.CER	GRM033R60J105MEA2D	T	17.8/31.3
C819	4030022260	S.CER	GRM033R60J105MEA2D	T	17.8/33.2
C820	4030022160	S.CER	GRM033B31A104KE84D	B	16.8/44.3
J700	6450000131	CON	HSJ1102-018540		
J701	6450002530	CON	HSJ4456-010320		
DS400	5030004550	LCD	GP11538A6		
DS401	5040003500	S.LED	HT-191 UYG-K828	T	52.8/4.6
DS402	5040003500	S.LED	HT-191 UYG-K828	T	48.3/4.6
MC700	7700003280	S.MIC	SPU0410HR5H-PB-7	T	36.6/6.6
S400	2250001090	ENC	ED08902OFK150S070C-2015		
Eqv.	7600000210	ENC	TP70N00E20-15F-1903 [#13]		
S401	2260003490	S.SWI	TAFG-12W-QR	B	17.4/1.9
EP1	8930101610	LCD	SRCN-4066-SP-N-W (SHJ)		
EP3	6910018460	S.BEA	MMZ1005Y102C-T	B	33.3/9.5
EP4	6910014690	S.BEA	MPZ1608S221A-T	B	24.5/20.0
EP400	6910021240	S.BEA	MMZ1005A152ET	B	78.9/38.3
EP700	6910018460	S.BEA	MMZ1005Y102C-T	B	24.0/45.6
EP701	6910018460	S.BEA	MMZ1005Y102C-T	B	18.7/45.5
EP702	6910019900	S.BEA	MPZ1608S601AT	B	26.6/42.1
EP703	6910016330	S.BEA	MMZ1005S 601CT-S	B	38.3/42.0
EP704	6910018460	S.BEA	MMZ1005Y102C-T	B	37.0/45.7

Eqv.= This component is equivalent to the REF No. component listed above, and may be substituted on parts orders and repairs.

M.=Mounted side (T: Mounted on the Top side, B: Mounted on the Bottom side)
H/V LOCATION=See the BOARD LAYOUTS for details.

The underlined parts have been updated from the previous version of the addendum, or from the original page.

[MAIN-A UNIT] (for IC-G86)

REF NO.	PART NO.	DESCRIPTION		M.	H/V LOCATION
IC1	1110007010	S.IC	NJM12904R-TE1	B	34.7/29.4
IC3	1110010000	S.IC	AT1846S	B	47.4/16.1
IC400	1130019660	S.IC	BR24G128NUX-5TR	B	92.2/14.0
IC402	1140018490	S.IC	STM32L073VBT6	B	81.0/20.5
IC403	1110007780	S.IC	NJU7704F3-28A-TE1	B	75.4/8.2
IC701	1110007630	S.IC	NJM2783V-TE1	T	39.6/41.5
IC702	1110010010	S.IC	U2429G-S08-R	B	23.1/36.7
IC706	1110008450	S.IC	ISD8102SYI T&R	T	22.5/35.4
IC707	6910027810	S.DC	TPS561201DDCR	B	51.4/41.1
IC817	1110010140	S.IC	TLV9002IDGKR	B	31.2/36.7
IC818	1180004950	S.REG	XC6701B502MR-G	T	7.4/29.0
IC819	1110008890	S.IC	NJU7056F3-TE2	T	20.2/29.7
IC820	1130007021	S.IC	TC7S66FU(TE85LF)	B	52.8/32.2
Q2	1590005410	S.TRA	DTC014YEBTL	B	42.2/31.7
Q4	1590005560	S.TRA	DTA014EEBTL	B	40.2/31.3
Q6	1530003322	S.TRA	2SC5108-YLF	B	37.6/8.0
Q7	1560002420	S.FET	RD01MUS2B-T513	B	37.2/15.8
Q8	1530003322	S.TRA	2SC5108-YLF	B	38.4/21.4
Q9	1560002460	S.FET	RD08MUS2-T512	B	29.6/13.4
Q10	1560002190	S.FET	RUM002N02T2L	B	39.2/28.0
Q12	1590005410	S.TRA	DTC014YEBTL	B	27.7/33.8
Q400	1530002851	S.TRA	2SC4116-BL(TE85RF)	B	64.2/3.5
Q401	1590005430	S.TRA	DTC044TEBTL	B	90.2/32.4
Q703	1590004220	S.TRA	DRA9123Y0L	B	21.6/45.8
Q704	1590005410	S.TRA	DTC014YEBTL	T	41.5/5.3
Q705	1590005410	S.TRA	DTC014YEBTL	B	18.1/41.0
Q706	1590004590	S.TRA	DMC506010R	B	14.5/42.1
Q707	1520001010	S.TRA	2SB1132G-R-AB3-R	B	10.1/41.3
Q711	1590005410	S.TRA	DTC014YEBTL	B	17.2/39.4
Q712	1590005410	S.TRA	DTC014YEBTL	B	73.1/38.1
Q716	1590005410	S.TRA	DTC014YEBTL	B	37.4/44.0
Q717	1510001270	S.TRA	2SAR502UBTL	B	37.3/39.7
Q718	1590005410	S.TRA	DTC014YEBTL	T	35.5/36.2
Q720	1510001270	S.TRA	2SAR502UBTL	T	31.9/37.1
Q721	1590004230	S.TRA	LMUN5213DW1T1G	B	40.2/44.1
Q722	1550000590	S.FET	UT6401G-AG6-R	T	10.9/30.4
Q723	1560002190	S.FET	RUM002N02T2L	B	13.2/31.4
Q724	1560002190	S.FET	RUM002N02T2L	T	20.5/31.8
Q725	1560002190	S.FET	RUM002N02T2L	B	17.9/42.9
D2	1750001810	S.DIO	L1SS400T1G	B	40.4/25.8
D3	1790001830	S.VAR	AVR-M1005C270MTAAB	B	25.5/20.1
D4	1720000701	S.VAR	1SV305(TPH3F)	B	18.1/24.6
D5	1720000701	S.VAR	1SV305(TPH3F)	B	16.3/25.4
D6	1750003940	S.DIO	RN142SMT2R	B	17.5/14.6
D7	1750003940	S.DIO	RN142SMT2R	B	15.7/20.4
D8	1750003940	S.DIO	RN142SMT2R	B	15.7/21.6
D9	1750003830	S.DIO	RB751CM-40T2R	B	15.0/22.8
D12	1750001810	S.DIO	L1SS400T1G	B	74.4/5.4
D13	1750003940	S.DIO	RN142SMT2R	B	17.5/15.8
D403	1750001810	S.DIO	L1SS400T1G	B	94.7/23.3
D404	1750001810	S.DIO	L1SS400T1G	B	94.7/26.9
D408	1750001810	S.DIO	L1SS400T1G	B	94.7/29.3
D409	1750001810	S.DIO	L1SS400T1G	B	92.2/26.9
D410	1750001810	S.DIO	L1SS400T1G	B	92.2/24.5
D411	1750001810	S.DIO	L1SS400T1G	B	92.2/22.4
D413	1750001820	S.DIO	LRB706F-40T1G	B	92.8/31.9
D700	1750003390	S.ZEN	RCLAMP1521P.TCT	T	8.4/34.9
D705	1750001810	S.DIO	L1SS400T1G	B	36.6/36.8
D706	1750001810	S.DIO	L1SS400T1G	B	35.9/34.9
D708	1750001810	S.DIO	L1SS400T1G	T	16.6/39.1
D711	1750003830	S.DIO	RB751CM-40T2R	B	73.4/40.2
D714	1750003830	S.DIO	RB751CM-40T2R	B	72.0/39.7
D717	1750001810	S.DIO	L1SS400T1G	B	10.5/31.0
D719	1750001810	S.DIO	L1SS400T1G	B	16.0/45.2
X2	6050014880	S.XTA	CR-1079 (13 MHz)	B	61.9/8.9
X400	6050014200	S.XTA	CR-1021 (12.288 MHz)	B	82.5/7.3
L3	6200013820	S.COI	MLK1005S27NJT	B	36.7/9.5
L4	6200013830	S.COI	MLK1005S22NJT	B	33.3/12.3
L5	6200017370	S.COI	SDWL1608CR10GSTF 0.1U	B	38.8/23.3
L6	6200012540	S.COI	0.30-1.2-5TR 16.1N	B	24.1/15.8
L7	6200013010	S.COI	0.30-0.9-5TL 10.3N	B	23.8/13.3
L8	6200017390	S.COI	SDWL1608C47NJSTF 47N	B	19.6/24.6
L9	6200012390	S.COI	0.30-0.92-3TR 5.8N	B	21.3/13.2
L10	6200012470	S.COI	0.30-1.7-7TL 45.3N	B	20.5/10.8
L11	6200017560	S.COI	NLV25T-R82J-EF	T	20.8/16.5
L12	6200017390	S.COI	SDWL1608C47NJSTF 47N	B	13.7/24.2
L13	6200013820	S.COI	MLK1005S27NJT	B	21.8/24.2
L15	6200012470	S.COI	0.30-1.7-7TL 45.3N	B	11.6/18.7
L16	6200012470	S.COI	0.30-1.7-7TL 45.3N	B	17.3/18.1
L17	6200012760	S.COI	0.35-1.6-7TL 37.5N	B	7.5/18.2
L18	6200012780	S.COI	0.30-1.4-6TL 27.2N	B	9.2/13.7
L19	6200003640	S.COI	MLF1608E 100K-T	B	43.4/10.6
L22	6200003960	S.COI	MLF1608A 1R0K-T	B	62.0/11.6
L702	6200017010	S.COI	VLS252012CX-100M-1	B	52.2/38.2
L705	6200017010	S.COI	VLS252012CX-100M-1	B	46.4/39.7
R1	7510001730	S.THE	ERTJ0EP 473J	T	22.0/6.6
R2	7030014860	S.RES	RGC1/16SC104DTH (100 k)	T	21.6/5.3
R4	7030021060	S.RES	MCR25JZHFL R150 (0.15)	B	29.4/26.9
R8	7030015520	S.RES	RMC1/16JPTP	B	65.4/9.2
R10	7030016550	S.RES	RMC1/16SK154FTH (150 k)	B	31.5/26.4
R11	7030016560	S.RES	RMC1/16SJPTH	B	61.5/10.5
R12	7030016550	S.RES	RMC1/16SK154FTH (150 k)	B	29.8/30.1

REF NO.	PART NO.	DESCRIPTION		M.	H/V LOCATION
R13	7030017370	S.RES	RGC1/16SC183DTH (18 k)	B	31.5/28.0
R14	7030015980	S.RES	RMC1/16S-333JTH (33 k)	B	38.7/31.5
R16	7030016030	S.RES	RMC1/16S-154JTH (150 k)	B	36.7/31.8
R17	7030015990	S.RES	RMC1/16S-683JTH (68 k)	B	36.7/32.7
R18	7030015960	S.RES	RMC1/16S-472JTH (4.7 k)	B	76.5/4.4
R19	7030015960	S.RES	RMC1/16S-472JTH (4.7 k)	B	76.5/5.4
R20	7030016740	S.RES	RMC1/16SK474DTH (470 k)	B	31.6/30.1
R21	7030016740	S.RES	RMC1/16SK474DTH (470 k)	B	33.0/27.2
R23	7030016360	S.RES	RMC1/16S-123JTH (12 k)	B	33.0/25.6
R24	7030015900	S.RES	RMC1/16S-470JTH (47)	B	52.9/17.9
R26	7030016030	S.RES	RMC1/16S-154JTH (150 k)	B	37.7/30.0
R27	7030016050	S.RES	RMC1/16S-102JTH (1 k)	B	50.9/14.6
R28	7030017370	S.RES	RGC1/16SC183DTH (18 k)	B	30.7/30.1
R30	7030016050	S.RES	RMC1/16S-102JTH (1 k)	B	37.7/28.4
R32	7030016120	S.RES	RMC1/16S-682JTH (6.8 k)	B	40.9/27.7
R33	7030016110	S.RES	RMC1/16S-473JTH (47 k)	B	43.2/18.0
R36	7030015910	S.RES	RMC1/16S-101JTH (100)	B	39.5/9.1
R37	7030016120	S.RES	RMC1/16S-682JTH (6.8 k)	B	39.0/7.9
R38	7030016150	S.RES	RMC1/16S-100JTH (10)	B	35.8/7.2
R41	7030016180	S.RES	RMC1/16S-680JTH (68)	B	38.1/11.1
R42	7030016510	S.RES	RMC1/16S-4R7JTH (4.7)	B	38.2/12.3
R44	7030016190	S.RES	RMC1/16S-273JTH (27 k)	B	39.5/11.9
R45	7030016250	S.RES	RMC1/16S-220JTH (22)	B	38.5/24.6
R46	7030015920	S.RES	RMC1/16S-221JTH (220)	B	36.7/23.3
R47	7030015910	S.RES	RMC1/16S-101JTH (100)	B	36.4/21.7
R48	7030016090	S.RES	RMC1/16S-223JTH (22 k)	B	39.5/12.8
R49	7030016390	S.RES	RMC1/16S-184JTH (180 k)	B	37.8/19.9
R50	7030016390	S.RES	RMC1/16S-184JTH (180 k)	B	36.2/19.9
R51	7030016250	S.RES	RMC1/16S-220JTH (22)	B	32.1/9.3
R52	7030016300	S.RES	RMC1/16S-332JTH (3.3 k)	B	30.9/7.2
R53	7030016000	S.RES	RMC1/16S-823JTH (82 k)	B	30.9/8.1
R55	7030016290	S.RES	RMC1/16S-222JTH (2.2 k)	B	17.5/26.4
R56	7030016050	S.RES	RMC1/16S-102JTH (1 k)	B	17.1/27.6
R57	7030016290	S.RES	RMC1/16S-222JTH (2.2 k)	B	15.9/26.4
R58	7030016370	S.RES	RMC1/16S-271JTH (270)	T	21.9/19.2
R59	7030016370	S.RES	RMC1/16S-271JTH (270)	T	21.0/19.2
R60	7030015990	S.RES	RMC1/16S-683JTH (68 k)	T	14.6/9.0
R67	7030016110	S.RES	RMC1/16S-473JTH (47 k)	B	40.1/29.4
R400	7030016290	S.RES	RMC1/16S-222JTH (2.2 k)	B	64.6/5.3
R401	7030016440	S.RES	RMC1/16S-272JTH (2.7 k)	B	66.5/4.9
R402	7030016110	S.RES	RMC1/16S-473JTH (47 k)	B	92.7/19.8
R403	7030016110	S.RES	RMC1/16S-473JTH (47 k)	B	92.2/18.6
R404	7030016050	S.RES	RMC1/16S-102JTH (1 k)	B	92.1/28.0
R405	7030016050	S.RES	RMC1/16S-102JTH (1 k)	B	91.9/25.7
R406	7030016050	S.RES	RMC1/16S-102JTH (1 k)	B	92.6/23.5
R407	7030016050	S.RES	RMC1/16S-102JTH (1 k)	B	92.5/21.4
R409	7030015970	S.RES	RMC1/16S-103JTH (10 k)	B	90.1/15.8
R410	7030015970	S.RES	RMC1/16S-103JTH (10 k)	B	72.0/12.3
R411	7030015970	S.RES	RMC1/16S-103JTH (10 k)	B	72.0/13.3
R412	7030015960	S.RES	RMC1/16S-472JTH (4.7 k)	B	91.5/17.4
R413	7030015960	S.RES	RMC1/16S-472JTH (4.7 k)	B	92.4/17.4
R416	7030015900	S.RES	RMC1/16S-470JTH (47)	B	79.1/10.0
R417	7030015900	S.RES	RMC1/16S-470JTH (47)	B	78.2/10.0
R421	7030016060	S.RES	RMC1/16S-105JTH (1 M)	B	81.3/10.5
R425	7030016110	S.RES	RMC1/16S-473JTH (47 k)	B	89.4/9.6
R426	7030016330	S.RES	RMC1/16S-153JTH (15 k)	B	90.8/30.8
R427	7030016830	S.RES	RGC1/16SC153DTH (15.0 k)	B	92.3/30.0
R428	7030016560	S.RES	RMC1/16SJPTH	B	69.6/17.9
R429	7030015970	S.RES	RMC1/16S-103JTH (10 k)	B	73.5/7.9
R430	7030016180	S.RES	RMC1/16S-680JTH (68)	B	66.0/3.3
R702	7030016500	S.RES	RMC1/16S-562JTH (5.6 k)	B	29.9/33.9
R703	7030016000	S.RES	RMC1/16S-823JTH (82 k)	B	31.1/34.4
R704	7030016110	S.RES	RMC1/16S-473JTH (47 k)	B	33.4/34.5
R705	7030016110	S.RES	RMC1/16S-473JTH (47 k)	B	34.6/34.8
R706	7030015930	S.RES	RMC1/16S-471JTH (470)	B	23.1/45.6
R708	7030015980	S.RES	RMC1/16S-333JTH (33 k)	B	27.7/36.2
R712	7030016190	S.RES	RMC1/16S-273JTH (27 k)	B	21.4/44.2
R713	7030016110	S.RES	RMC1/16S-473JTH (47 k)	B	21.4/43.0
R715	7030015980	S.RES	RMC1/16S-333JTH (33 k)	T	37.9/2.5
R716	7030015970	S.RES	RMC1/16S-103JTH (10 k)	B	21.2/31.9
R717	7030015970	S.RES	RMC1/16S-103JTH (10 k)	B	20.2/40.2
R720	7030016050	S.RES	RMC1/16S-102JTH (1 k)	B	16.6/43.2
R721	7030016110	S.RES	RMC1/16S-473JTH (47 k)	B	14.5/44.1
R723	7030015970	S.RES	RMC1/16S-103JTH (10 k)	B	37.3/35.7
R724	7030016020	S.RES	RMC1/16S-104JTH (100 k)	B	37.7/34.5
R725	7030016340	S.RES	RMC1/16S-393JTH (39 k)	T	36.3/42.6
R726	7030015980	S.RES	RMC1/16S-333JTH (33 k)	T	40.9/35.4
R727	7030016350	S.RES	RMC1/16S-122JTH (1.2 k)	T	40.0/35.9
R728	7030016050	S.RES	RMC1/16S-102JTH (1 k)	T	40.0/34.3
R729	7030015910	S.RES	RMC1/16S-101JTH (100)	T	22.6/38.7
R731	7030016050	S.RES	RMC1/16S-102JTH (1 k)	B	16.5/41.5
R732	7030015970	S.RES	RMC1/16S-103JTH (10 k)	T	39.6/46.1
R733	7030016030	S.RES	RMC1/16S-154JTH (150 k)	B	34.8/37.4
R734	7030016340	S.RES	RMC1/16S-393JTH (39 k)	T	41.3/37.2
R735	7030016050	S.RES	RMC1/16S-102JTH (1 k)	B	36.1/37.8
R738	7030016050	S.RES	RMC1/16S-102JTH (1 k)	B	13.9/40.3
R739	7030016330	S.RES	RMC1/16S-153JTH (15 k)	B	15.5/40.3
R740	7030016910	S.RES	RGC1/16SC393DTH (39 k)	T	8.7/31.7
R742	7030016330	S.RES	RMC1/16S-153JTH (15 k)	B	38.8/37.9
R745	7030016430	S.RES	RMC1/16S-392JTH (3.9 k)	B	15.5/39.4
R746	7030016830	S.RES	RGC1/16SC153DTH (15.0 k)	T	8.7/33.3
R750	7030016330	S.RES	RMC1/16S-153JTH (15 k)	B	39.5/36.3
R751	7030016020	S.RES	RMC1/16S-104JTH (100 k)	T	17.6/37.2
R752	7030016020	S.RES	RMC1/16S-104JTH (100 k)	T	16.3/38.0
R753	7030016020	S.RES	RMC1/16S-104JTH (100 k)	B	18.6/38.1
R759	7030015970	S.RES	RMC1/16S-103JTH (10 k)	B	47.1/42.1
R762	7030016810	S.RES	RGC1/16SC392DTH (3.90 k)	B	50.9/43.5
R763	7030017510	S.RES	RGC1/16SC272DTH (2.7 k)	B	52.5/43.5
R765	7030016050	S.RES	RMC1/16S-102JTH (1 k)	B	25.8/40.8
R767	7030016880	S.RES	RGC1/16SC223DTH (22.0 k)	B	50.9/44.4
R771	7030016110	S.RES	RMC1/16S-473JTH (47 k)	B	37.1/41.6
R773	7030016050	S.RES	RMC1/16S-102JTH (1 k)	B	37.1/42.5

Eqv.= This component is equivalent to the REF No. component listed above, and may be substituted on parts orders and repairs.

M.=Mounted side (T: Mounted on the Top side, B: Mounted on the Bottom side)
H/V LOCATION=See the BOARD LAYOUTS for details.

The underlined parts have been updated from the previous version of the addendum, or from the original page.

[MAIN-A UNIT] (for IC-G86)

REF NO.	PART NO.	DESCRIPTION		M.	H/V LOCATION
R780	7030016110	S.RES	RMC1/16S-473JTH (47 k)	T	33.8/37.4
R781	7030016050	S.RES	RMC1/16S-102JTH (1 k)	T	35.0/37.7
R784	7030015960	S.RES	RMC1/16S-472JTH (4.7 k)	B	42.0/40.0
R785	7030015950	S.RES	RMC1/16S-152JTH (1.5 k)	B	41.5/42.4
R786	7030016410	S.RES	RMC1/16S-561JTH (560)	B	41.5/41.5
R787	7030016020	S.RES	RMC1/16S-104JTH (100 k)	B	41.1/40.0
R788	7030015970	S.RES	RMC1/16S-103JTH (10 k)	T	36.9/38.3
R789	7030016040	S.RES	RMC1/16S-224JTH (220 k)	T	37.9/37.1
R790	7030016020	S.RES	RMC1/16S-104JTH (100 k)	T	13.1/31.0
R791	7030016020	S.RES	RMC1/16S-104JTH (100 k)	T	14.0/31.0
R795	7030015980	S.RES	RMC1/16S-333JTH (33 k)	B	23.3/30.4
R796	7030016000	S.RES	RMC1/16S-823JTH (82 k)	B	21.6/30.0
R797	7030016110	S.RES	RMC1/16S-473JTH (47 k)	T	20.3/28.0
R798	7030016110	S.RES	RMC1/16S-473JTH (47 k)	T	21.9/28.0
R799	7030016060	S.RES	RMC1/16S-105JTH (1 M)	B	11.7/30.0
R800	7030016060	S.RES	RMC1/16S-105JTH (1 M)	B	11.7/29.1
R801	7030015950	S.RES	RMC1/16S-152JTH (1.5 k)	B	23.0/47.2
R803	7030015950	S.RES	RMC1/16S-152JTH (1.5 k)	B	31.1/33.5
R804	7030015990	S.RES	RMC1/16S-683JTH (68 k)	B	20.4/29.6
R805	7030016020	S.RES	RMC1/16S-104JTH (100 k)	T	17.9/30.3
R806	7030016060	S.RES	RMC1/16S-105JTH (1 M)	B	50.0/31.9
R807	7030016060	S.RES	RMC1/16S-105JTH (1 M)	B	50.9/32.6
R808	7030016110	S.RES	RMC1/16S-473JTH (47 k)	B	34.3/32.6
R809	7030015910	S.RES	RMC1/16S-101JTH (100)	T	19.2/32.2
R810	7030016020	S.RES	RMC1/16S-104JTH (100 k)	T	17.9/32.2
R811	7030016060	S.RES	RMC1/16S-105JTH (1 M)	B	18.4/44.3
R812	7030016060	S.RES	RMC1/16S-105JTH (1 M)	B	19.3/42.8
C4	4030022140	S.CER	GRM033B31H102KA12D	B	28.6/30.1
C19	4030022140	S.CER	GRM033B31H102KA12D	B	37.8/32.1
C20	4030022100	S.CER	GRM0332C1H100JA01D	B	32.8/26.4
C22	4030022140	S.CER	GRM033B31H102KA12D	B	50.2/19.5
C23	4030022160	S.CER	GRM033B31A104KE84D	B	35.7/27.1
C24	4030022160	S.CER	GRM033B31A104KE84D	B	50.8/19.5
C25	4030022260	S.CER	GRM033R60J105MEA2D	T	42.3/8.9
C26	4030022160	S.CER	GRM033B31A104KE84D	B	38.5/30.1
C28	4030022160	S.CER	GRM033B31A104KE84D	B	47.0/12.0
C29	4030022140	S.CER	GRM033B31H102KA12D	B	47.0/12.6
C32	4030022160	S.CER	GRM033B31A104KE84D	B	47.9/12.3
C33	4030022160	S.CER	GRM033B31A104KE84D	B	45.1/12.8
C35	4030022140	S.CER	GRM033B31H102KA12D	B	45.1/12.2
C36	4030022260	S.CER	GRM033R60J105MEA2D	B	39.3/26.7
C37	4550007520	S.TAN	F931A106MAABMA	B	44.6/8.9
Eqv.	4550009370	S.TAN	267E1002106MR533		
C38	4030022090	S.CER	GRM0332C1H330JA01D	B	39.9/7.9
C42	4030022140	S.CER	GRM033B31H102KA12D	B	36.0/8.0
C45	4030022140	S.CER	GRM033B31H102KA12D	B	36.0/8.6
C46	4030022080	S.CER	GRM0332C1H101JA01D	B	37.9/9.9
C47	4030022140	S.CER	GRM033B31H102KA12D	B	39.5/11.1
C49	4030022140	S.CER	GRM033B31H102KA12D	B	36.6/22.5
C52	4030022120	S.CER	GRM0332C1H470JA01D	B	39.8/20.2
C53	4030022140	S.CER	GRM033B31H102KA12D	B	34.3/11.8
C54	4030022140	S.CER	GRM033B31H102KA12D	B	36.6/20.9
C57	4030022630	S.CER	0402N100C500CT	B	34.2/14.8
C58	4030023090	S.CER	0402B102K500CT	B	26.1/17.5
C59	4030022920	S.CER	0402N820J500CT	B	33.5/13.5
C62	4030022740	S.CER	0402N220J500CT	B	20.9/24.2
C64	4030022140	S.CER	GRM033B31H102KA12D	B	31.1/8.9
C65	4030023450	S.CER	0603N100D500CT	B	22.9/10.9
C67	4030023700	S.CER	0603N390J500CT	B	24.1/10.9
C68	4030022640	S.CER	0402N101J500CT	B	19.1/26.4
C69	4030023500	S.CER	0603N150J500CT	B	20.9/7.5
C71	4030022160	S.CER	GRM033B31A104KE84D	B	16.1/27.9
C73	4030023090	S.CER	0402B102K500CT	B	18.8/13.6
C75	4030022560	S.CER	0402N5R0B500CT	B	16.8/23.8
C76	4030023520	S.CER	0603N180J500CT	B	20.9/8.7
C79	4030022140	S.CER	GRM033B31H102KA12D	T	22.2/18.1
C81	4030022700	S.CER	0402N180J500CT	B	18.8/12.7
C82	4030022640	S.CER	0402N101J500CT	B	14.0/26.5
C84	4030023090	S.CER	0402B102K500CT	B	14.9/16.8
C86	4030026570	S.CER	RF15N120J500CT	B	12.8/20.9
C88	4030022520	S.CER	0402N1R0B500CT	B	12.4/16.8
C89	4030022700	S.CER	0402N180J500CT	B	15.2/18.0
C90	4030022630	S.CER	0402N100C500CT	B	15.4/24.1
C92	4030026710	S.CER	RF15N2R0B500CT	B	10.4/20.9
C93	4030022700	S.CER	0402N180J500CT	B	15.1/19.3
C94	4030022580	S.CER	0402N7R0C500CT	B	9.4/18.4
C95	4030022740	S.CER	0402N220J500CT	B	9.4/20.0
C101	4030022740	S.CER	0402N220J500CT	B	7.5/15.8
C109	4030022260	S.CER	GRM033R60J105MEA2D	B	63.6/8.5
C110	4030022260	S.CER	GRM033R60J105MEA2D	B	64.4/8.5
C113	4030022140	S.CER	GRM033B31H102KA12D	B	61.2/12.8
C114	4030025320	S.CER	GRM0332C1H151JA01D	B	61.2/14.0
C115	4030022160	S.CER	GRM033B31A104KE84D	B	42.6/17.1
C116	4030022140	S.CER	GRM033B31H102KA12D	B	42.6/16.5
C117	4030022160	S.CER	GRM033B31A104KE84D	B	52.3/16.3
C118	4030022140	S.CER	GRM033B31H102KA12D	B	52.3/16.9
C120	4030026710	S.CER	RF15N2R0B500CT	B	43.5/14.8
C122	4030026710	S.CER	RF15N2R0B500CT	B	46.0/12.0
C124	4030026710	S.CER	RF15N2R0B500CT	T	40.7/16.2
C125	4030022630	S.CER	0402N100C500CT	B	7.5/14.9
C126	4030022560	S.CER	0402N5R0B500CT	B	7.4/12.1
C405	4030022160	S.CER	GRM033B31A104KE84D	B	71.8/19.6
C408	4030025440	S.CER	GRM0332C1E271JA01D	B	70.7/17.6
C409	4030022160	S.CER	GRM033B31A104KE84D	B	70.7/16.6
C410	4030022160	S.CER	GRM033B31A104KE84D	B	71.8/20.2
C411	4030022160	S.CER	GRM033B31A104KE84D	B	71.0/22.5
C412	4030022160	S.CER	GRM033B31A104KE84D	B	71.0/23.2
C413	4030025350	S.CER	GRM0332C1H120JA01D	B	80.3/7.8
C414	4030022160	S.CER	GRM033B31A104KE84D	B	70.4/15.1
C415	4030022160	S.CER	GRM033B31A104KE84D	B	71.0/26.5
C416	4030025350	S.CER	GRM0332C1H120JA01D	B	81.7/9.5
C417	4030022260	S.CER	GRM033R60J105MEA2D	B	76.8/9.7
C418	4030022160	S.CER	GRM033B31A104KE84D	B	76.8/10.3
C420	4030022260	S.CER	GRM033R60J105MEA2D	B	77.3/10.9
C421	4030022160	S.CER	GRM033B31A104KE84D	B	77.3/11.5
C425	4030025400	S.CER	GRM033R61A273KE84D	B	77.1/8.7
C426	4030022160	S.CER	GRM033B31A104KE84D	B	87.6/29.1
C427	4030022260	S.CER	GRM033R60J105MEA2D	B	84.8/11.1
C428	4030022160	S.CER	GRM033B31A104KE84D	B	90.1/14.0
C429	4550007520	S.TAN	F931A106MAABMA	B	80.5/36.5
Eqv.	4550009370	S.TAN	267E1002106MR533		
C430	4030022140	S.CER	GRM033B31H102KA12D	B	64.6/20.2
C437	4030022140	S.CER	GRM033B31H102KA12D	B	83.3/11.1
C446	4030022140	S.CER	GRM033B31H102KA12D	B	84.0/11.1
C451	4030022120	S.CER	GRM0332C1H470JA01D	B	62.6/17.3
C452	4030022120	S.CER	GRM0332C1H470JA01D	B	62.0/18.0
C453	4030022120	S.CER	GRM0332C1H470JA01D	B	71.8/24.5
C454	4030022120	S.CER	GRM0332C1H470JA01D	B	64.0/15.9
C455	4030022120	S.CER	GRM0332C1H470JA01D	B	65.0/15.9
C456	4030022120	S.CER	GRM0332C1H470JA01D	B	87.8/13.1
C457	4030022120	S.CER	GRM0332C1H470JA01D	B	65.9/17.0
C458	4030022120	S.CER	GRM0332C1H470JA01D	B	70.2/20.3
C459	4030022120	S.CER	GRM0332C1H470JA01D	B	64.5/24.1
C460	4030022120	S.CER	GRM0332C1H470JA01D	B	65.4/24.2
C461	4030022120	S.CER	GRM0332C1H470JA01D	B	70.0/22.3
C462	4030022120	S.CER	GRM0332C1H470JA01D	B	69.4/23.4
C463	4030022120	S.CER	GRM0332C1H470JA01D	B	70.8/24.4
C464	4030022120	S.CER	GRM0332C1H470JA01D	B	70.2/25.0
C465	4030022120	S.CER	GRM0332C1H470JA01D	B	72.0/25.8
C466	4030022120	S.CER	GRM0332C1H470JA01D	B	74.7/29.5
C467	4030022120	S.CER	GRM0332C1H470JA01D	B	74.6/33.1
C468	4030022120	S.CER	GRM0332C1H470JA01D	B	60.3/35.3
C469	4030022120	S.CER	GRM0332C1H470JA01D	B	61.3/35.5
C470	4030022120	S.CER	GRM0332C1H470JA01D	B	62.2/35.5
C471	4030022120	S.CER	GRM0332C1H470JA01D	B	63.2/35.5
C472	4030022120	S.CER	GRM0332C1H470JA01D	B	69.0/35.3
C473	4030022120	S.CER	GRM0332C1H470JA01D	B	62.7/37.2
C474	4030022120	S.CER	GRM0332C1H470JA01D	B	62.0/37.8
C475	4030022120	S.CER	GRM0332C1H470JA01D	B	77.4/36.4
C477	4030022120	S.CER	GRM0332C1H470JA01D	B	85.5/33.7
C700	4030022260	S.CER	GRM033R60J105MEA2D	B	24.5/47.1
C702	4030022960	S.CER	0402B333K100CT	B	32.0/32.5
C703	4030022260	S.CER	GRM033R60J105MEA2D	B	32.3/33.7
C707	4030022260	S.CER	GRM033R60J105MEA2D	B	34.5/34.0
C708	4030023190	S.CER	0402B392K500CT	B	26.8/36.2
C710	4030022160	S.CER	GRM033B31A104KE84D	B	22.2/43.2
C711	4030022260	S.CER	GRM033R60J105MEA2D	B	26.4/34.8
C724	4030022260	S.CER	GRM033R60J105MEA2D	T	39.0/2.3
C726	4030022160	S.CER	GRM033B31A104KE84D	B	20.3/44.2
C731	4030022260	S.CER	GRM033R60J105MEA2D	B	36.9/34.4
C734	4030022160	S.CER	GRM033B31A104KE84D	T	38.8/46.0
C735	4030022260	S.CER	GRM033R60J105MEA2D	B	13.7/43.9
C738	4030022260	S.CER	GRM033R60J105MEA2D	T	40.4/46.0
C740	4030022260	S.CER	GRM033R60J105MEA2D	B	34.9/36.2
C741	4030025440	S.CER	GRM0332C1E271JA01D	T	41.2/36.4
C742	4030022150	S.CER	GRM033B31E103KA12D	B	14.1/39.5
C744	4030022950	S.CER	0402B273K100CT	B	23.3/32.0
C745	4030022260	S.CER	GRM033R60J105MEA2D	T	39.2/37.3
C747	4030022260	S.CER	GRM033R60J105MEA2D	T	42.4/37.5
C748	4030022260	S.CER	GRM033R60J105MEA2D	B	37.5/37.8
C749	4030022260	S.CER	GRM033R60J105MEA2D	T	18.4/36.6
C750	4030022160	S.CER	GRM033B31A104KE84D	B	38.7/37.1
C752	4030022160	S.CER	GRM033B31A104KE84D	B	38.4/36.0
C753	4030022160	S.CER	GRM033B31A104KE84D	T	17.3/35.6
C755	4030022160	S.CER	GRM033B31A104KE84D	B	16.8/38.0
C756	4030022160	S.CER	GRM033B31A104KE84D	B	47.0/41.3
C759	4550008220	S.TAN	F931C106MAA	B	10.2/44.8
Eqv.	4550009180	S.TAN	267E1602106MR533		
C760	4030025550	S.CER	CL21A226MAQNNPE	B	48.8/41.0
C767	4520000020	S.NIO	NOJC227M006RWJV	T	28.5/35.2
C768	4030022260	S.CER	GRM033R60J105MEA2D	T	7.4/26.9
C769	4030022160	S.CER	GRM033B31A104KE84D	B	50.1/38.7
C772	4030022140	S.CER	GRM033B31H102KA12D	B	27.2/40.9
C774	4030022120	S.CER	GRM0332C1H470JA01D	B	26.6/40.9
C777	4030025550	S.CER	CL21A226MAQNNPE	B	54.8/41.1
C784	4030025440	S.CER	GRM0332C1E271JA01D	B	38.5/45.7
C792	4030025230	S.CER	TMK107BJ105KAHT	T	7.0/31.4
C793	4030025230	S.CER	TMK107BJ105KAHT	B	45.6/42.1
C794	4030025230	S.CER	TMK107BJ105KAHT	T	9.9/27.3
C798	4030022260	S.CER	GRM033R60J105MEA2D	B	40.3/40.2
C799	4030022260	S.CER	GRM033R60J105MEA2D	T	39.0/35.7
C800	4030022160	S.CER	GRM033B31A104KE84D	B	32.2/7.1
C802	4030022260	S.CER	GRM033R60J105MEA2D	T	18.4/31.3
C803	4030025320	S.CER	GRM0332C1H151JA01D	B	20.2/30.5
C804	4030022260	S.CER	GRM033R60J105MEA2D	T	21.9/29.3
C805	4030025370	S.CER	GRM033R61C104KE14D	B	12.0/31.3
C806	4030025320	S.CER	GRM0332C1H151JA01D	T	37.7/36.3
C807	4030022260	S.CER	GRM033R60J105MEA2D	T	39.0/35.1
C808	4030022260	S.CER	GRM033R60J105MEA2D	T	41.2/46.0
C809	4030022260	S.CER	GRM033R60J105MEA2D	T	39.0/36.3
C810	4030022260	S.CER	GRM033R60J105MEA2D	B	22.1/47.5
C811	4550007520	S.TAN	F931A106MAABMA	B	25.1/43.8
Eqv.	4550009370	S.TAN	267E1002106MR533		
C812	4030022260	S.CER	GRM033R60J105MEA2D	B	21.5/47.5
C813	4030023110	S.CER	0402B152K500CT	B	22.5/29.1
C814	4030022260	S.CER	GRM033R60J105MEA2D	B	50.9/31.1
C815	4030022160	S.CER	GRM033B31A104KE84D	B	33.2/32.9
C817	4030022260	S.CER	GRM033R60J105MEA2D	T	18.4/33.2
C818	4030022260	S.CER	GRM033R60J105MEA2D	T	17.8/31.3
C819	4030022260	S.CER	GRM033R60J105MEA2D	T	17.8/33.2
C820	4030022160	S.CER	GRM033B31A104KE84D	B	16.8/44.3

Eqv.= This component is equivalent to the REF No. component listed above, and may be substituted on parts orders and repairs.

M.=Mounted side (T: Mounted on the Top side, B: Mounted on the Bottom side)
H/V LOCATION=See the BOARD LAYOUTS for details.

The underlined parts have been updated from the previous version of the addendum, or from the original page.

[MAIN-A UNIT] (for IC-G86)

REF NO.	PART NO.	DESCRIPTION		M.	H/V LOCATION
J700	6450000131	CON	HSJ1102-018540		
J701	6450002530	CON	HSJ4456-010320		
DS400	5030004550	LCD	GP11538A6		
DS401	5040003500	S.LED	HT-191 UYG-K828	T	52.8/4.6
DS402	5040003500	S.LED	HT-191 UYG-K828	T	48.3/4.6
MC700	7700003280	S.MIC	SPU0410HR5H-PB-7	T	36.6/6.6
S400	2250001090	ENC	ED08902OFK150S070C-2015		
S401	2260003490	S.SWI	TAFG-12W-QR	B	17.4/1.9
EP1	8930101610	LCD	SRCN-4066-SP-N-W (SHJ)		
EP3	6910018460	S.BEA	MMZ1005Y102C-T	B	33.3/9.5
EP4	6910014690	S.BEA	MPZ1608S221A-T	B	24.5/20.0
EP400	6910021240	S.BEA	MMZ1005A152ET	B	78.9/38.3
EP700	6910018460	S.BEA	MMZ1005Y102C-T	B	24.0/45.6
EP701	6910018460	S.BEA	MMZ1005Y102C-T	B	18.7/45.5
EP702	6910019900	S.BEA	MPZ1608S601AT	B	26.6/42.1
EP703	6910016330	S.BEA	MMZ1005S 601CT-S	B	38.3/42.0
EP704	6910018460	S.BEA	MMZ1005Y102C-T	B	37.0/45.7

Eqv.= This component is equivalent to the REF No. component listed above, and may be substituted on parts orders and repairs.

M.=Mounted side (T: Mounted on the Top side, B: Mounted on the Bottom side)
H/V LOCATION=See the BOARD LAYOUTS for details.

SECTION 6 MECHANICAL PARTS

The underlined parts have been updated from the previous version of the addendum, or from the original page.

[CHASSIS PARTS]

REF NO.	PART NO.	DESCRIPTION	QTY.
J1	6510032950	BNC-R4066	1
MP1	8010021713	3285 CHASSIS-3	1
MP2	8930079900	3285 TERMINAL HOLDER	1
MP5	8930104470	4066 MINUS TERMINAL	1
MP9	8830003390	VR NUT (AB)	1
MP10	8610014170	KNOB N-391	1
MP11	8930080280	3254 TOP SEAL	1
MP12	8810009511	PHBT M2 × 4 NI-ZC3	9
MP13	8810009511	PHBT M2 × 4 NI-ZC3	1
MP15	8810008761	PHBT M2 × 8 NI-ZC3	2
MP16	8210034561	4066 FRONT PANEL ASSEMBLY-1 [#11]	1
	8210034561	4066 FRONT PANEL ASSEMBLY-1 [#12]	1
	8210034561	4066 FRONT PANEL ASSEMBLY-1 [#13]	1
	8210034551	4066 FRONT PANEL ASSEMBLY (A)-1 [#31]	1
	8210034521	4066 FRONT PANEL (B) ASSEMBLY-1 [#41]	1
MP21	8930103870	3285 A-SIDE SEAL	1
MP22	8930101260	4066 SIDE PLATE	1
MP24	8930101210	THERMAL SHEET DT TC-200CAT-20 (8 × 12)	1
MP26	8830004770	STEP NUT (R)	1
MP28	8850003421	SEALING WASHER (AA)-1	1
MP30	8930104270	3620 MIC RUBBER (A)	1
MP33	8930080020	3253 A-TERMINAL	1
MP34	8930104600	INSULATION SHEET (PF)	1

[ACCESSORIES]

REF NO.	PART NO.	DESCRIPTION	QTY.
EP1	–	FA-B57V† [#11]	1
	–	FA-B45V† [#12]	1
	–	FA-B57V† [#13]	1
	–	FA-B45V† [#31]	1
	–	FA-B57V† [#41]	1
EP2	–	BP-298† [#11]	1
	–	BP-298† [#12]	1
	–	BP-264† [#13]	1
	–	BP-298† [#31]	1
	–	BP-298† [#41]	1
EP3	–	BC-240† [#11]	1
	–	BC-240† [#12]	1
	–	BC-192† [#13]	1
	–	BC-240† [#31]	1
	–	BC-240† [#41]	1
EP4	–	BC-242†	1
MP1	–	MB-124†	1
MP2	8210025841	3285 JACK PANEL-1 [#11]	1
	8210025841	3285 JACK PANEL-1 [#12]	1
	8210025841	3285 JACK PANEL-1 [#13]	1
	8210025841	3285 JACK PANEL-1 [#31]	1
	8210026621	3285 JACK PANEL (B)-1 G [#41]	1
MP3	8810004861	PH M2 × 6 ZK3	2

† Sold as an option.

[MAIN UNIT] (for IC-V86 and IC-V86-T)

REF NO.	PART NO.	DESCRIPTION	QTY.
J700	6450000131	HSJ1102-018540	1
J701	6450002530	HSJ4456-010320	1
DS400	5030004550	GP11538A6	1
MC700*	7700003280	SPU0410HR5H-PB-7	1
S400	2250001090	ED08902OFK150S070C-2015	1
S401*	2260003490	TAFG-12W-QR	1
EP1	8930101610	SRCN-4066-SP-N-W	1
MP1*	8510022740	4066 VCO CASE	1
MP4*	8930101082	3620 SP SPRING-2	1
MP5*	8930100370	4066 ANT SPRING	1
MP6*	8410003170	4066 PA HEATSINK	1
MP7	8210034210	4066 REFLECTOR	1
MP8	8930101200	4066 LCD HOLDER	1
MP9	8930080260	3254 WHITE SHEET	1
MP100*	6910014760	OG-503040	1

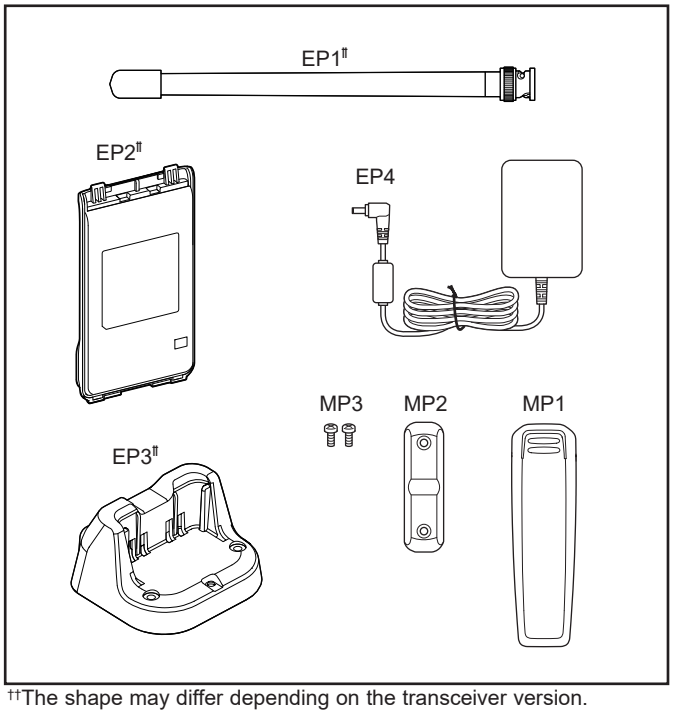

††The shape may differ depending on the transceiver version.

[MAIN-A UNIT] (for IC-G86)

REF NO.	PART NO.	DESCRIPTION	QTY.
J700	6450000131	HSJ1102-018540	1
J701	6450002530	HSJ4456-010320	1
DS400	5030004550	GP11538A6	1
MC700*	7700003280	SPU0410HR5H-PB-7	1
S400	2250001090	ED08902OFK150S070C-2015	1
S401*	2260003490	TAFG-12W-QR	1
EP1	8930101610	SRCN-4066-SP-N-W	1
MP1*	8510022740	4066 VCO CASE	1
MP4*	8930101082	3620 SP SPRING-2	1
MP5*	8930100370	4066 ANT SPRING	1
MP6*	8410003170	4066 PA HEATSINK	1
MP7	8210034210	4066 REFLECTOR	1
MP8	8930101200	4066 LCD HOLDER	1
MP9	8930080260	3254 WHITE SHEET	1
MP100*	6910014760	OG-503040	1

*: Refer to "BOARD LAYOUTS" for the location.

Screw abbreviations A, B0, BT: Self-tapping PH: Pan head BS: Brass NI: Nickel ZU: Zinc SUS: Stainless

The underlined parts have been updated from the previous version of the addendum, or from the original page.

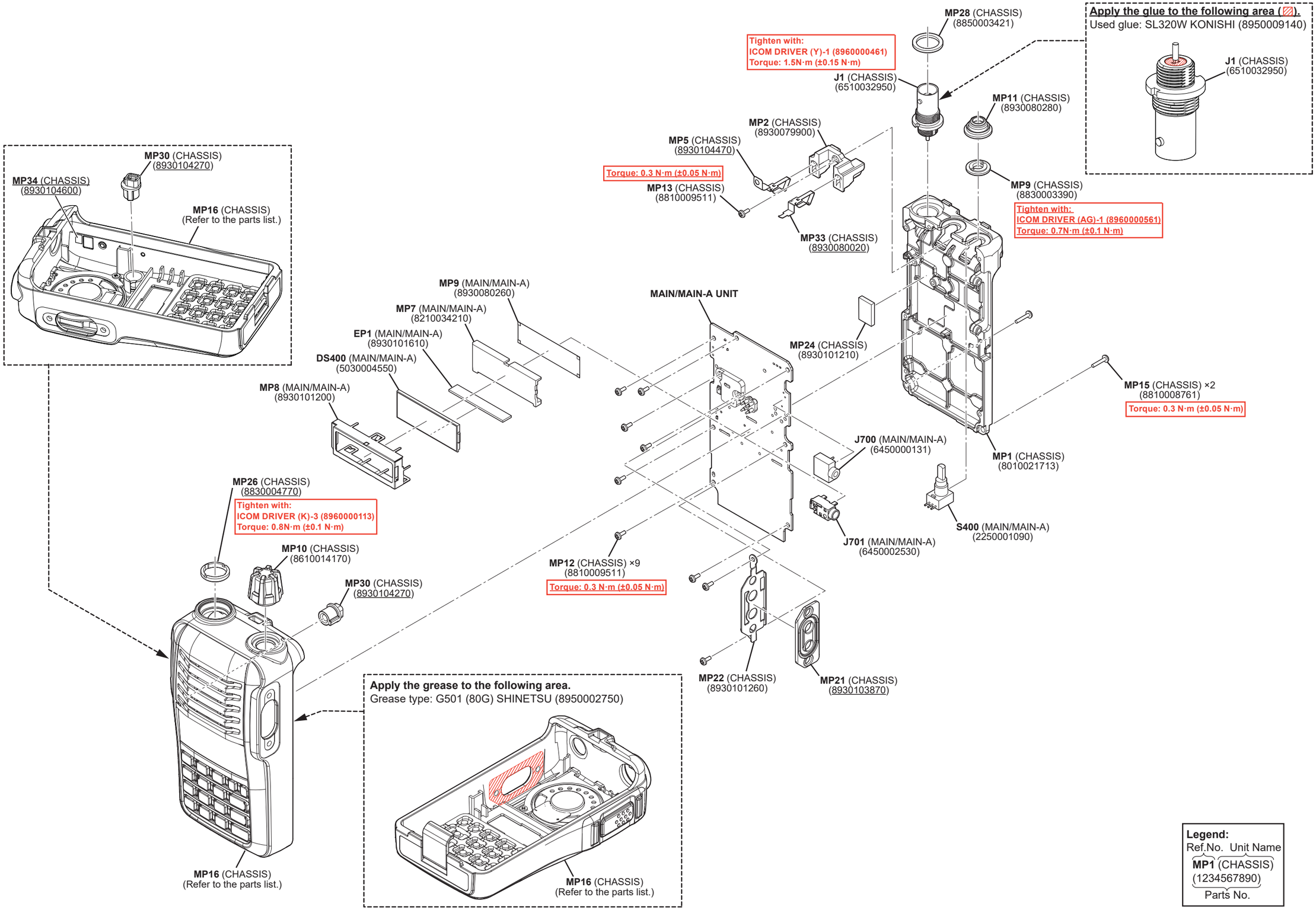

SECTION 7 BOARD LAYOUTS

The underlined parts have been updated from the previous version of the addendum, or from the original page.

The serial numbers of transceivers that use the PCB (B-9067C).

Model Name	Version Number	Serial Numbers
IC-V86	#11	11027101 and above (Plan)
IC-V86	#12	12006101 and above (Plan)
IC-V86	#13	13004801 and above (Plan)
IC-V86-T	#31	31004701 and above (Plan)
IC-G86	#41	41008201 and above

• **MAIN/MAIN-A UNIT (B-9067C: TOP VIEW)**

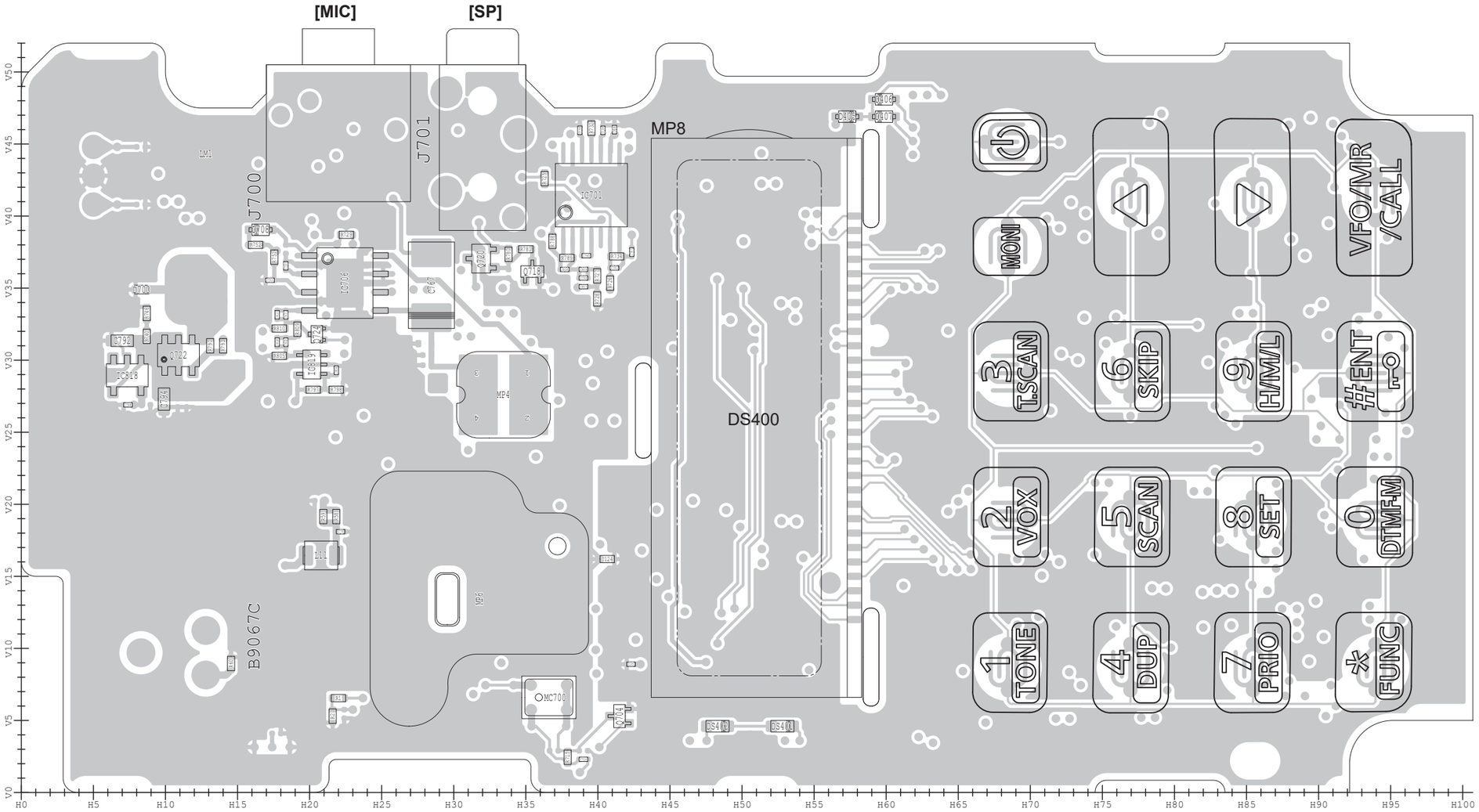

NOTE: Some parts may not be mounted on the PCB.

See the PARTS LIST H/V location on the PARTS LIST for location details.

The underlined parts have been updated from the previous version of the addendum, or from the original page.

• **MAIN/MAIN-A UNIT (B-9067C: BOTTOM VIEW)**

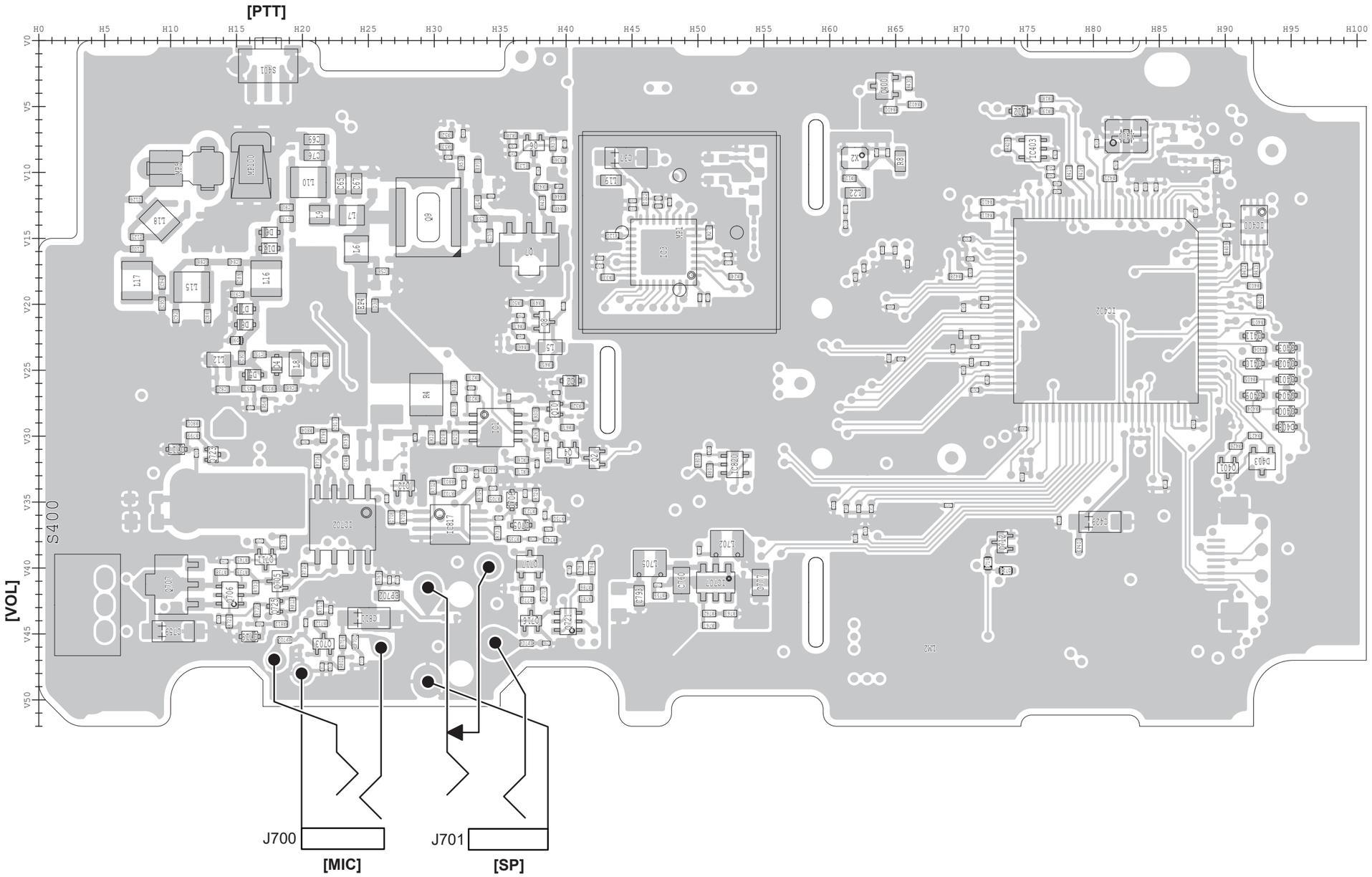

NOTE: Some parts may not be mounted on the PCB.

See the PARTS LIST H/V location on the PARTS LIST for location details.

SECTION 8 SCHEMATIC DIAGRAM

The underlined parts have been updated from the previous version of the addendum, or from the original page.

• MAIN UNIT (for IC-V86 and IC-V86-T) (1/3)

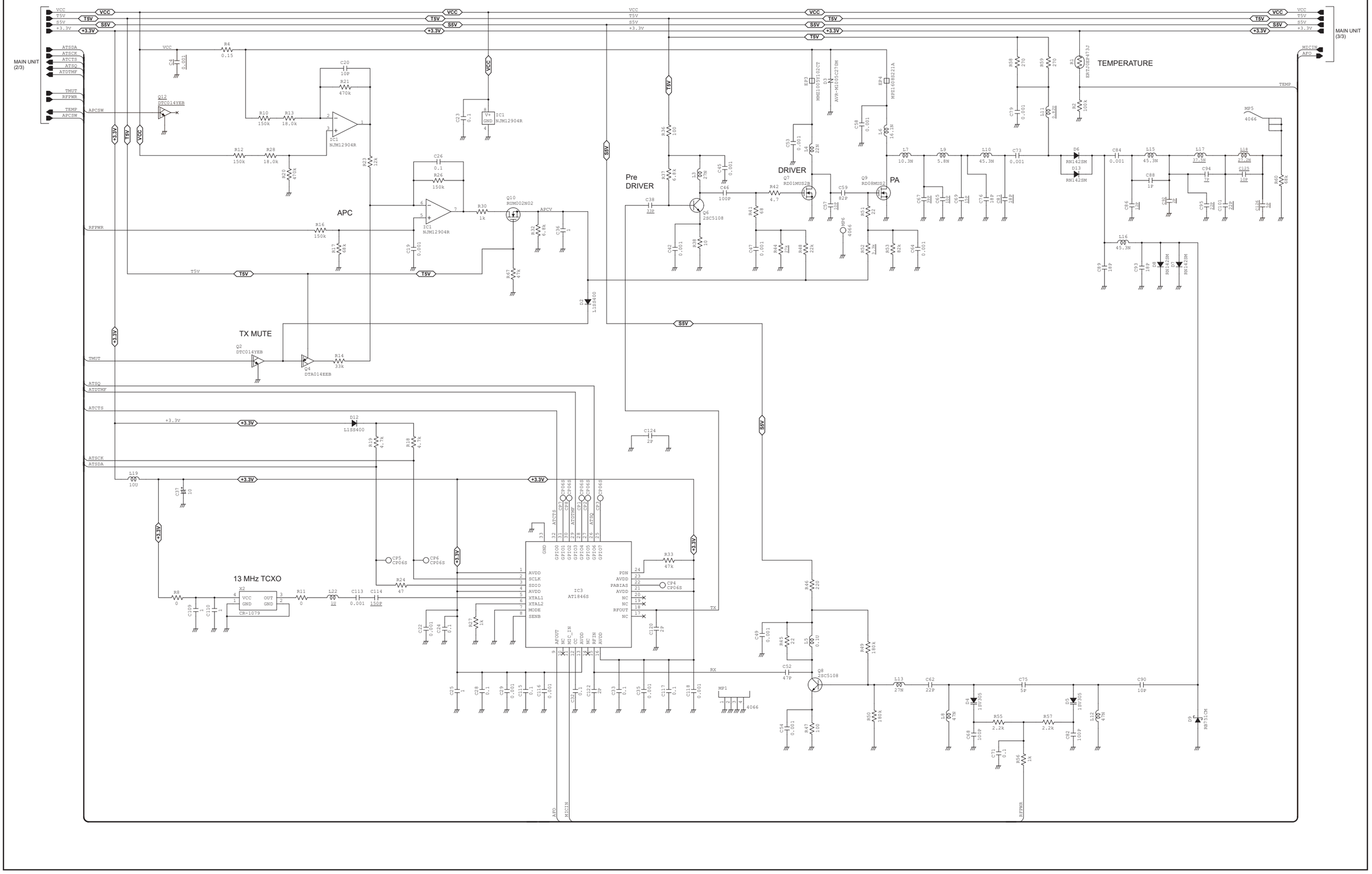

The underlined parts have been updated from the previous version of the addendum, or from the original page.

• MAIN UNIT (for IC-V86 and IC-V86-T) (2/3)

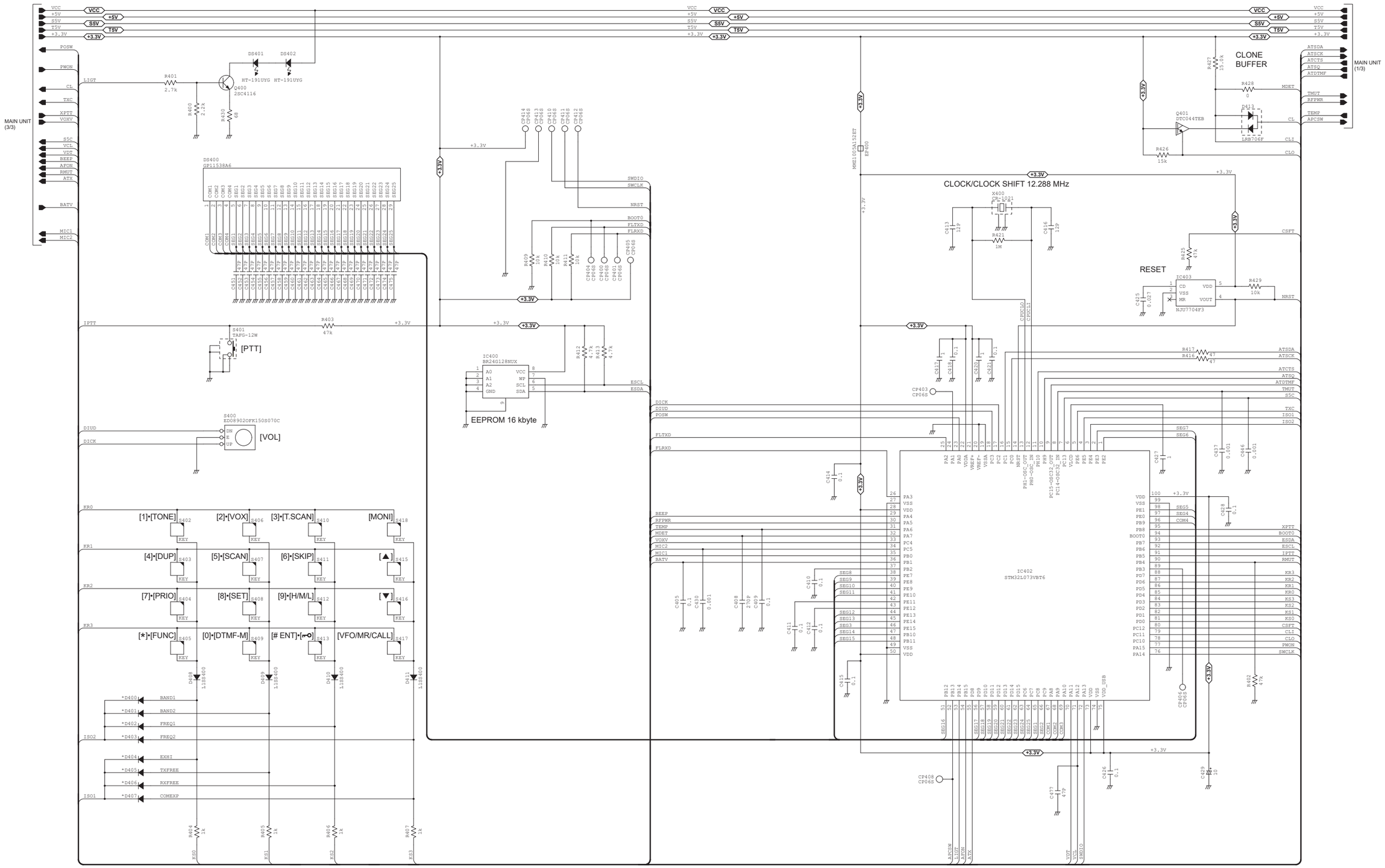

The underlined parts have been updated from the previous version of the addendum, or from the original page.

• MAIN UNIT (for IC-V86 and IC-V86-T) (3/3)

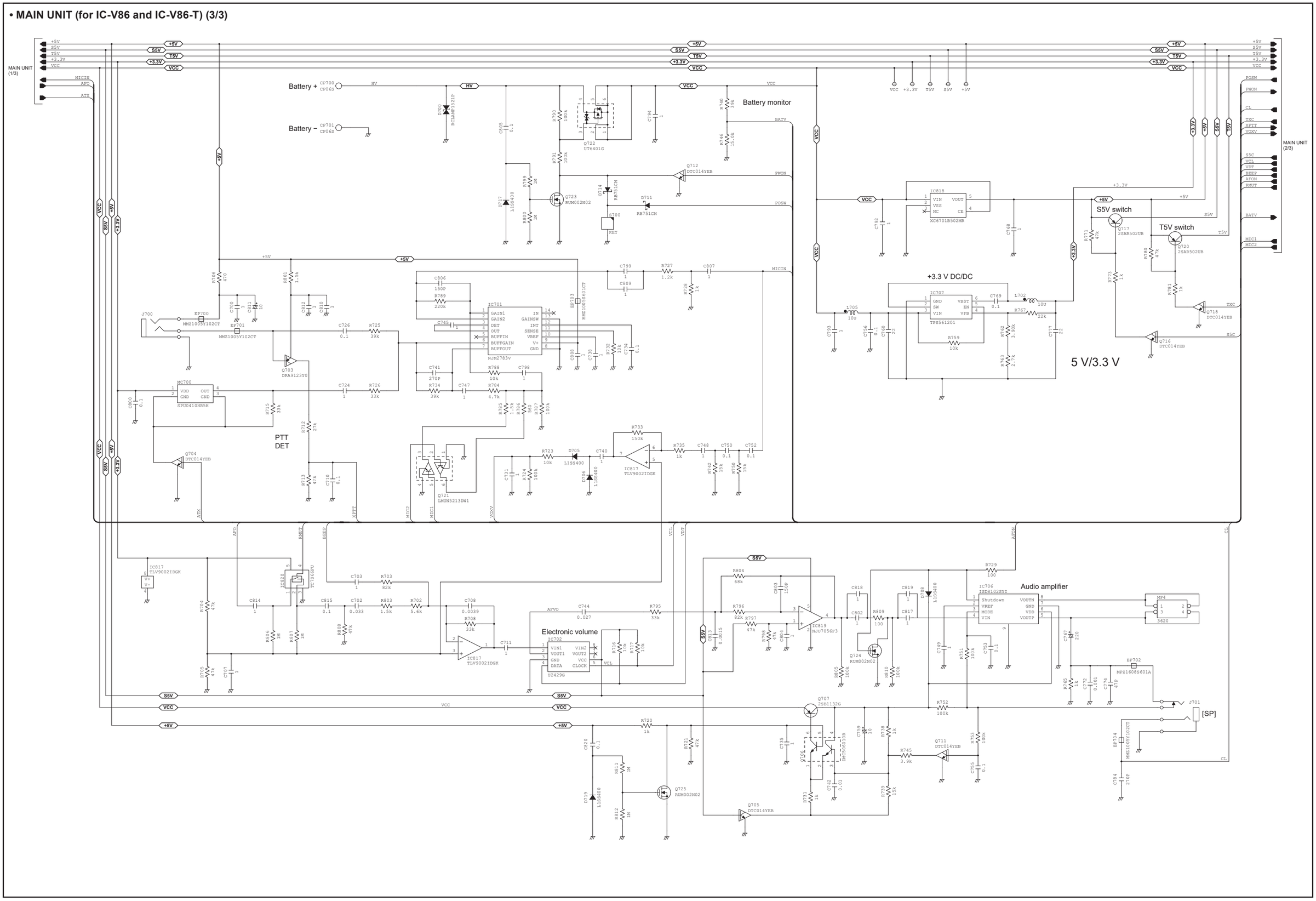

The underlined parts have been updated from the previous version of the addendum, or from the original page.

• MAIN-A UNIT (for IC-G86) (1/3)

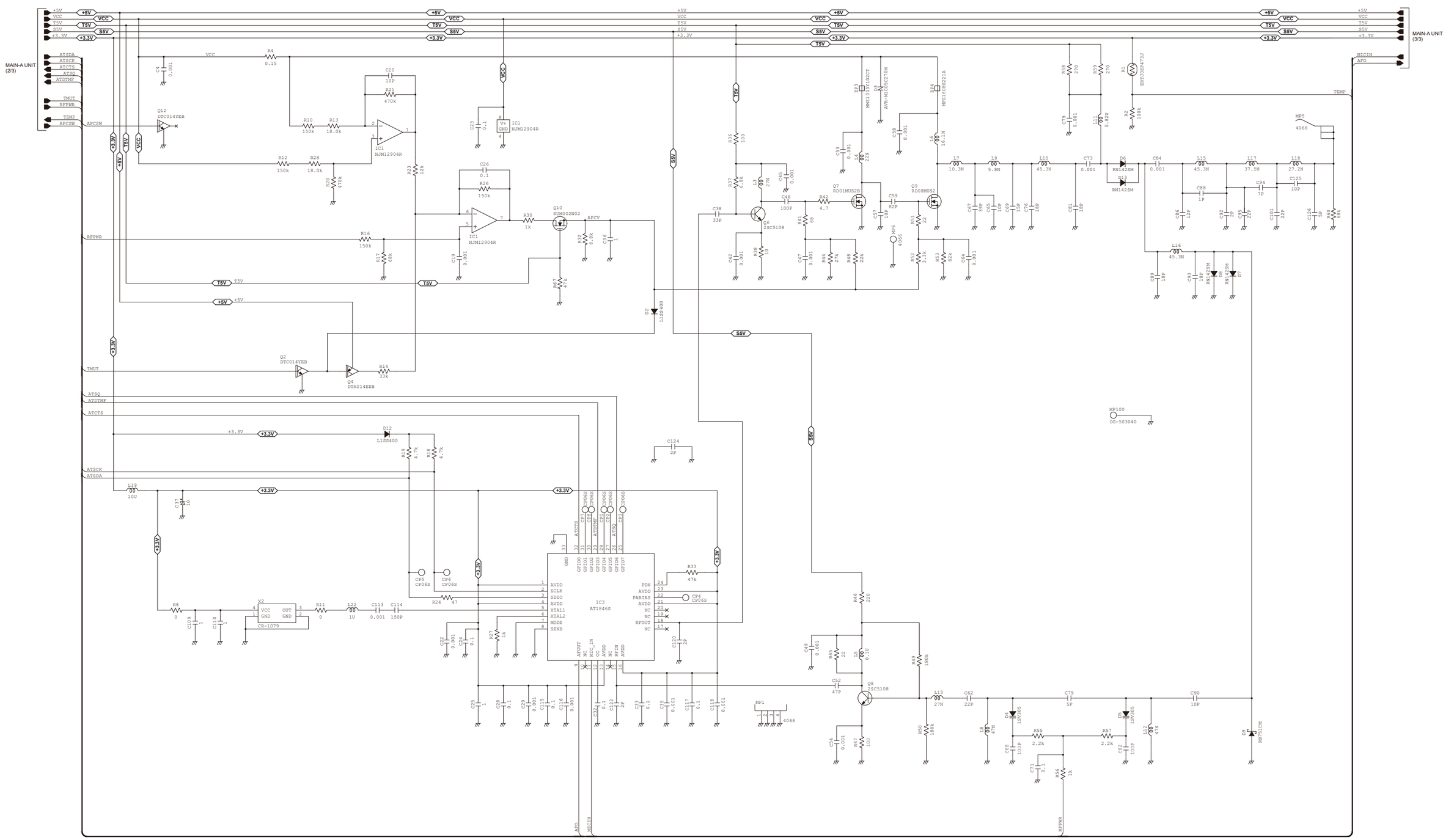

The underlined parts have been updated from the previous version of the addendum, or from the original page.

• MAIN-A UNIT (for IC-G86) (2/3)

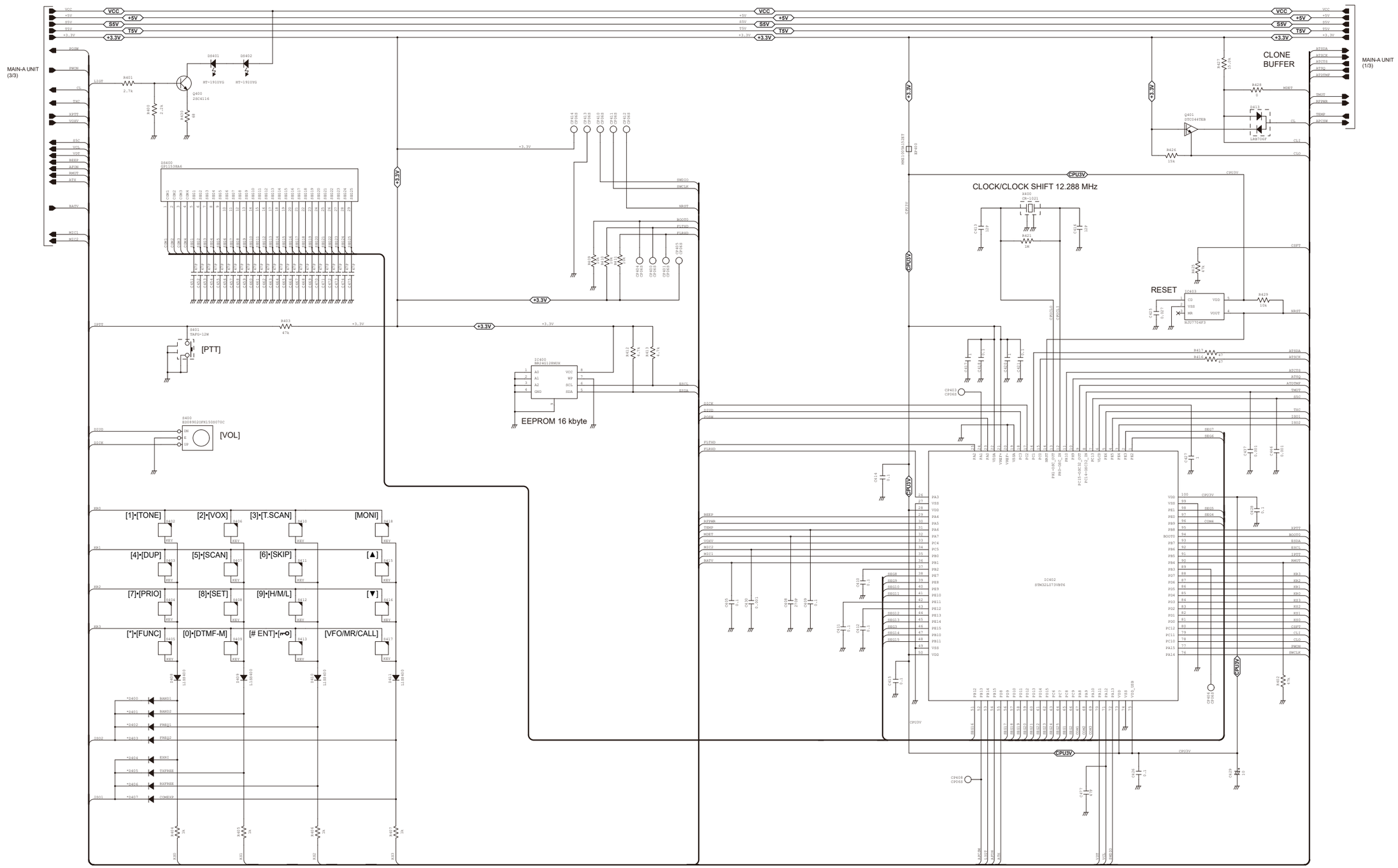

The underlined parts have been updated from the previous version of the addendum, or from the original page.

• MAIN-A UNIT (for IC-G86) (3/3)

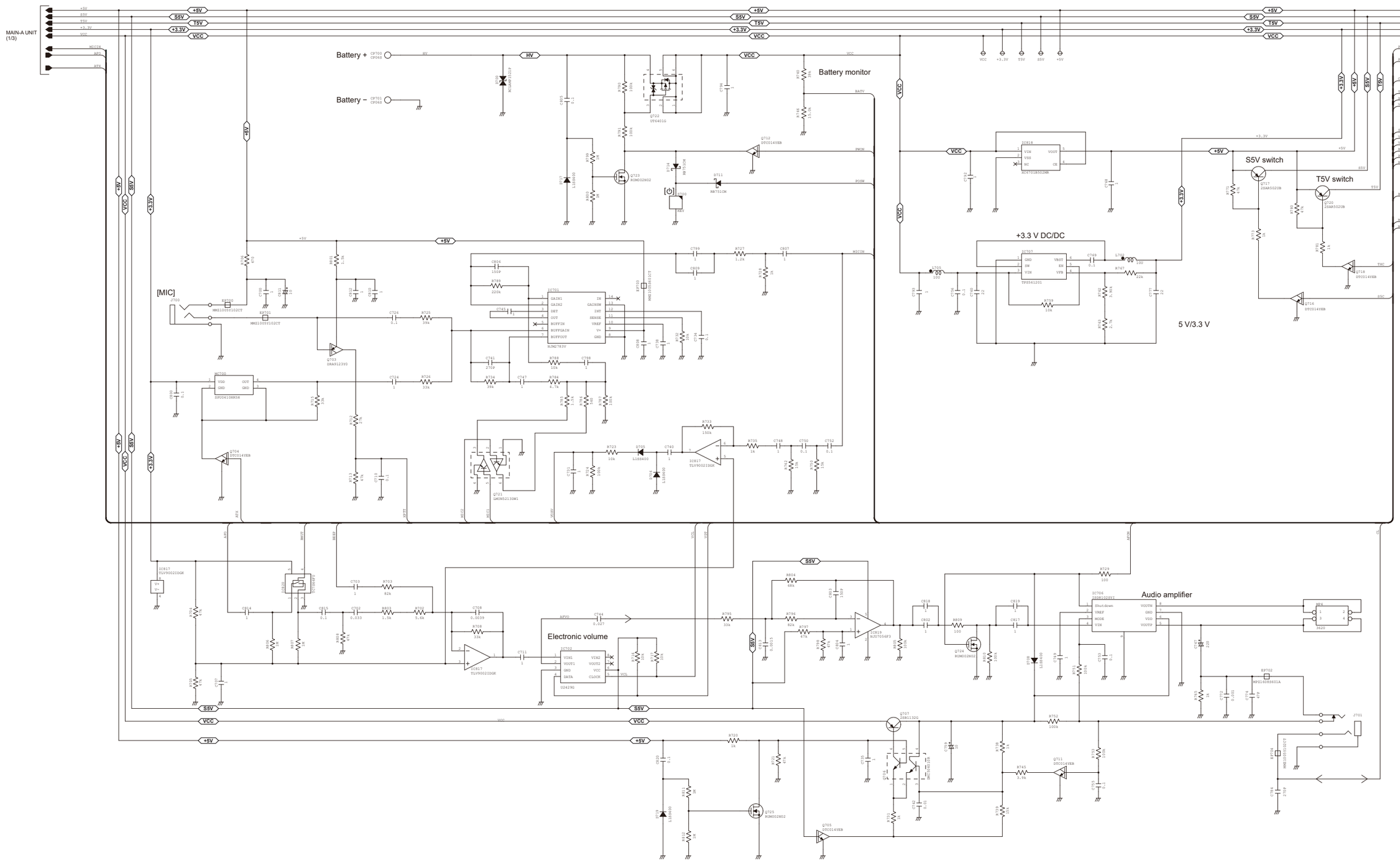

April 2020

SERVICE MANUAL ADDENDUM

IC-V86/IC-V86-T/IC-G86

NOTE: Use these amended pages as one addendum set.
Do not mix them up with the previous master pages.

	Definitions
Replacement page	The page to replace the original one.
Addendum page	The page to be added to the original set.
Amended page	The page to be added as change history, including corrections.

CONTENTS

SPECIFICATIONS 1-1a
PARTS LIST ..... 5-1a~5-6a
MECHANICAL PARTS ..... 6-1a~6-2a
BOARD LAYOUTS ..... 7-1a~7-10a
VOLTAGE DIAGRAM ..... 8-1a~8-6a

[Version List]

Model	Version	Version Number	Operable Frequency Range (MHz)	Transmit output power	Installed unit		Remarks
					MAIN	MAIN-A	
IC-V86	USA-01	#11	136~174	7.0 W	✔	–	
IC-V86	EXP-01	#12	136~174	7.0 W	✔	–	
IC-V86	EXP-03	#13	136~174	7.0 W	✔	–	
IC-V86-T	THA-01	#31	144~147	5.0 W	✔	–	
IC-G86	EXP-01	#41*	136~174	7.0 W	–	✔	

*Newly added versions.

SECTION 1 SPECIFICATIONS

				IC-V86		IC-V86-T	IC-G86
				[USA-01]	[EXP-01], [EXP-03]	[THA-01]	[EXP-01]
GENERAL	**Frequency range**		RX	136~174 MHz		144~147 MHz	136~174 MHz
			TX	144~148 MHz	136~174 MHz	144~147 MHz	136~174 MHz
	Operating mode			F2D, F3E			
	Number of memory channels			207 channels (200 memory channels, 1 call channel, and 6 scan edge channels)			200 channels
	Scan types			Full*3, Program*3, Priority, Memory (with Skip function), and Tone			
	Selectable tuning setps			5, 10, 12.5, 15, 20, 25, 30, and 50 kHz			
	Usable temperature range			−20°C~+60°C (−4°F~+140°F)			
	Frequency stability			±2.5 ppm (−20°C~+60°C)			
	Power supply			Specified Icom's battery packs and case only 7.5 V DC (negative ground)			
	Current drain (at 7.5 V DC)	RX	Internal speaker	450 mA typical (Maximum audio)			
			External speaker	200 mA typical (Maximum audio)			
		TX	Extra high power	1600 mA typical		−	1600 mA typical
			High power	1400 mA typical			
			Middle power	1000 mA typical			
			Low power	500 mA typical			
	Antenna connector			BNC (50 Ω)			
	Dimensions (projections not included)		With BP-298	58.6 (W)×112 (H)×30.5 (D) mm (2.3 (W)×4.4 (H)×1.2 (D) inches)			
			With BP-264	58.6 (W)×112 (H)×26.0 (D) mm (2.3 (W)×4.4 (H)×1.0 (D) inches)			
	Weight (approximate)			300 g (10.6 oz, with BP-298 and FA-B57V) 360 g (12.7 oz, with BP-264 and FA-B57V)			
TRANSMITTER	**Output power** (at 7.5 V DC)		Extra high power	7.0 W	7.0 W*1	−	7.0 W*1
			High power	5.5 W		5.0 W	5.5 W
			Middle power	2.5 W			
			Low power	0.5 W			
	Maximum frequency deviation		Wide	±5.0 kHz			
			Narrow	±2.5 kHz			
	Spurious emissions			Less than −60 dB			Less than −60 dB (−80 dB typical)
	Microphone impedance			2200 Ω			
RECEIVER	**Receive system**			Direct Conversion			
	Sensitivity*2 (at 12 dB SINAD)			0.14 μV typical			
	Squelch sensitivity*2 (threshold)			0.11 μV typical			
	Adjacent channel selectivity		Wide	75 dB typical			
			Narrow	70 dB typical			
	Intermodulation			65 dB typical			
	Audio output power		Internal speaker	1.5 W typical (at 5% distortion into the 8 Ω load)			
			External speaker	0.55 W typical (at 5% distortion into an 8 Ω load)			

*1 Guaranteed 144~160 MHz range only.
*2 The input signal strength level of this receive sensitivity is measured at the load end (PD).
*3 For IC-V86 and IC-V86-T only.

SECTION 5 PARTS LIST

The underlined parts have been updated from the previous version of the addendum, or from the original page.

[MAIN UNIT] (for IC-V86 and IC-V86-T)

REF NO.	PART NO.	DESCRIPTION		M.	H/V LOCATION
IC1	1110007010	S.IC	NJM12904R-TE1-#ZZZB	B	34.7/29.4
IC3	1110010000	S.IC	AT1846S	B	47.4/16.1
IC400	1130019660	S.IC	BR24G128NUX-5TR	B	92.2/14.0
Eqv.	1130019950	S.IC	BR24G128NUX-3ATTR		
IC402	1140018490	S.IC	STM32L073VBT6	B	81.0/20.5
IC403	1110007780	S.IC	NJU7704F3-28A-TE1-#ZZZH	B	75.4/8.2
IC701	1110007630	S.IC	NJM2783V-TE1-#ZZZH	T	39.6/41.5
IC702	1110010010	S.IC	U2429G-S08-R	B	21.9/37.5
IC706	1110008450	S.IC	ISD8102SYI T&R	T	21.7/35.4
IC707	6910027810	S.DC	TPS561201DDCR	B	51.4/41.1
IC817	1110010140	S.IC	TLV9002IDGKR	B	31.2/36.7
IC818	1180004950	S.REG	XC6701B502MR-G	T	7.4/29.0
IC819	1110008890	S.IC	NJU7056F3-TE2-#ZZZH	T	20.6/28.9
IC820	1130007021	S.IC	TC7S66FU (TE85LF)	B	52.8/32.2
Q2	1590005410	S.TRA	DTC014YEBTL	B	42.2/31.7
Q4	1590005560	S.TRA	DTA014EEBTL	B	40.2/31.3
Q6	1530003322	S.TRA	2SC5108-YLF	B	37.6/8.0
Q7	1560002420	S.FET	RD01MUS2B-T513	B	37.2/15.8
Q8	1530003322	S.TRA	2SC5108-YLF	B	38.4/21.4
Q9	1560002460	S.FET	RD08MUS2-T512	B	29.6/13.4
Q10	1560002190	S.FET	RUM002N02T2L	B	39.2/28.0
Q400	1530002851	S.TRA	2SC4116-BL (TE85RF)	B	64.2/3.5
Q401	1590005430	S.TRA	DTC044TEBTL	B	90.2/32.4
Q703	1590004220	S.TRA	DRA9123Y0L	B	21.6/45.8
Q704	1590005410	S.TRA	DTC014YEBTL	T	41.5/5.3
Q705	1590005410	S.TRA	DTC014YEBTL	B	18.1/41.0
Q706	1590004590	S.TRA	DMC506010R	B	14.5/42.1
Q707	1520001010	S.TRA	2SB1132G-R-AB3-R	B	10.1/41.3
Q711	1590005410	S.TRA	DTC014YEBTL	B	17.2/39.4
Q712	1590005410	S.TRA	DTC014YEBTL	B	73.1/38.1
Q716	1590005410	S.TRA	DTC014YEBTL	B	37.4/44.0
Q717	1510001270	S.TRA	2SAR502UBTL	B	37.3/39.7
Q718	1590005410	S.TRA	DTC014YEBTL	T	35.5/36.2
Q720	1510001270	S.TRA	2SAR502UBTL	T	31.9/37.1
Q721	1590004230	S.TRA	LMUN5213DW1T1G	B	40.2/44.1
Q722	1550000590	S.FET	UT6401G-AG6-R	T	10.9/30.4
Q723	1560002190	S.FET	RUM002N02T2L	B	14.6/31.5
Q724	1560002190	S.FET	RUM002N02T2L	T	22.9/31.8
Q725	1560002190	S.FET	RUM002N02T2L	B	17.9/42.9
D2	1750001810	S.DIO	L1SS400T1G	B	40.4/25.8
D3	1790001830	S.VAR	AVR-M1005C270MTAAB	B	25.5/20.1
D4	1720000701	S.VAR	1SV305 (TPH3F)	B	18.1/24.6
D5	1720000701	S.VAR	1SV305 (TPH3F)	B	16.3/25.3
D6	1750003940	S.DIO	RN142SMT2R	B	15.3/15.1
D7	1750003940	S.DIO	RN142SMT2R	B	13.0/20.1
D8	1750003940	S.DIO	RN142SMT2R	B	13.0/21.3
D9	1750003830	S.DIO	RB751CM-40T2R	B	13.3/22.5
D12	1750001810	S.DIO	L1SS400T1G	B	74.4/5.4
D13	1750003940	S.DIO	RN142SMT2R	B	15.3/16.3
D400	1750001810	S.DIO	L1SS400T1G Only [#31]	B	94.7/28.1
D401	1750001810	S.DIO	L1SS400T1G Only [#12]	B	94.7/25.7
D402	1750001810	S.DIO	L1SS400T1G Only [#31]	B	94.7/24.5
D404	1750001810	S.DIO	L1SS400T1G Only [#31]	B	94.7/26.9
D405	1750001810	S.DIO	L1SS400T1G [#12]	T	57.3/46.9
	1750001810	S.DIO	L1SS400T1G [#31]		
D407	1750001810	S.DIO	L1SS400T1G Only [#31]	T	59.9/46.9
D408	1750001810	S.DIO	L1SS400T1G	B	94.7/29.3
D409	1750001810	S.DIO	L1SS400T1G	B	92.2/26.9
D410	1750001810	S.DIO	L1SS400T1G	B	92.2/24.5
D411	1750001810	S.DIO	L1SS400T1G	B	92.2/22.4
D413	1750001820	S.DIO	LRB706F-40T1G	B	92.8/31.9
D700	1750003390	S.ZEN	RCLAMP1521P.TCT	T	8.4/34.9
D705	1750001810	S.DIO	L1SS400T1G	B	36.6/36.8
D706	1750001810	S.DIO	L1SS400T1G	B	35.9/34.9
D708	1750001810	S.DIO	L1SS400T1G	T	16.6/38.1
D711	1750003830	S.DIO	RB751CM-40T2R	B	73.4/40.2
D714	1750003830	S.DIO	RB751CM-40T2R	B	72.0/39.7
D717	1750001810	S.DIO	L1SS400T1G	B	15.3/34.8
D719	1750001810	S.DIO	L1SS400T1G	B	16.0/45.2
X2	6050014880	S.XTA	CR-1079 (13 MHz)	B	61.9/8.9
X400	6050014200	S.XTA	CR-1021 (12.288 MHz)	B	82.5/7.3
L3	6200013820	S.COI	MLK1005S27NJT	B	36.7/9.5
L4	6200013830	S.COI	MLK1005S22NJT	B	33.3/12.3
L5	6200017370	S.COI	SDWL1608CR10GSTF 0.1U	B	38.8/23.3
L6	6200012540	S.COI	0.30-1.2-5TR 16.1N	B	22.7/16.1
L7	6200013010	S.COI	0.30-0.9-5TL 10.3N	B	22.9/13.3
L8	6200017390	S.COI	SDWL1608C47NJSTF 47N	B	19.6/24.6
L9	6200012390	S.COI	0.30-0.92-3TR 5.8N	B	20.4/13.2
L10	6200012470	S.COI	0.30-1.7-7TL 45.3N	B	17.3/11.6
L11	6200002861	S.COI	NLV25T-4R7J-PF	T	18.4/17.9
L12	6200017390	S.COI	SDWL1608C47NJSTF 47N	B	14.7/23.9
L13	6200013820	S.COI	MLK1005S27NJT	B	21.8/24.2
L15	6200012470	S.COI	0.30-1.7-7TL 45.3N	B	9.8/17.0
L16	6200012470	S.COI	0.30-1.7-7TL 45.3N	B	15.6/18.8
L17	6200012780	S.COI	0.30-1.4-6TL 27.2N	B	9.0/13.6
L19	6200003640	S.COI	MLF1608E 100K-T	B	43.4/10.6
L22	6200003550	S.COI	MLF1608A 4R7K-T	B	62.0/11.6

Eqv.= This component is equivalent to the REF No. component listed above, and may be substituted on parts orders and repairs.

[MAIN UNIT] (for IC-V86 and IC-V86-T)

REF NO.	PART NO.	DESCRIPTION		M.	H/V LOCATION
L702	6200017010	S.COI	VLS252012CX-100M-1	B	52.2/38.2
L705	6200017010	S.COI	VLS252012CX-100M-1	B	46.4/39.7
R1	7510001730	S.THE	ERTJ0EP 473J	T	22.0/6.6
R2	7030014860	S.RES	RGC1/16SC104DTH (100 k)	T	21.6/5.3
R4	7030021060	S.RES	MCR25JZHFL R150 (0.15)	B	29.4/26.9
R8	7030015520	S.RES	RMC1/16JPTP	B	65.4/9.2
R10	7030016550	S.RES	RMC1/16SK154FTH (150 k)	B	31.5/26.4
R11	7030016560	S.RES	RMC1/16SJPTH	B	61.5/10.5
R12	7030016550	S.RES	RMC1/16SK154FTH (150 k)	B	29.8/30.1
R13	7030017370	S.RES	RGC1/16SC183DTH (18 k)	B	31.5/28.0
R14	7030015980	S.RES	RMC1/16S-333JTH (33 k)	B	38.7/31.5
R16	7030016030	S.RES	RMC1/16S-154JTH (150 k)	B	36.7/31.8
R17	7030015990	S.RES	RMC1/16S-683JTH (68 k)	B	36.7/32.7
R18	7030015960	S.RES	RMC1/16S-472JTH (4.7 k)	B	76.5/4.4
R19	7030015960	S.RES	RMC1/16S-472JTH (4.7 k)	B	76.5/5.4
R20	7030016740	S.RES	RMC1/16SK474DTH (470 k)	B	31.6/30.1
R21	7030016740	S.RES	RMC1/16SK474DTH (470 k)	B	33.0/27.2
R23	7030016360	S.RES	RMC1/16S-123JTH (12 k)	B	33.0/25.6
R24	7030015900	S.RES	RMC1/16S-470JTH (47)	B	52.9/17.9
R26	7030016030	S.RES	RMC1/16S-154JTH (150 k)	B	37.7/30.0
R27	7030016050	S.RES	RMC1/16S-102JTH (1 k)	B	50.9/14.6
R28	7030017370	S.RES	RGC1/16SC183DTH (18 k)	B	30.7/30.1
R30	7030016050	S.RES	RMC1/16S-102JTH (1 k)	B	37.7/28.4
R32	7030016120	S.RES	RMC1/16S-682JTH (6.8 k)	B	40.9/27.7
R33	7030016110	S.RES	RMC1/16S-473JTH (47 k)	B	43.2/18.0
R36	7030015910	S.RES	RMC1/16S-101JTH (100)	B	39.5/9.1
R37	7030016120	S.RES	RMC1/16S-682JTH (6.8 k)	B	39.0/7.9
R38	7030016150	S.RES	RMC1/16S-100JTH (10)	B	35.8/7.2
R41	7030016180	S.RES	RMC1/16S-680JTH (68)	B	38.3/11.0
R42	7030016510	S.RES	RMC1/16S-4R7JTH (4.7)	B	38.2/12.3
R44	7030015980	S.RES	RMC1/16S-333JTH (33 k)	B	39.5/11.9
R45	7030016250	S.RES	RMC1/16S-220JTH (22)	B	38.5/24.6
R46	7030015920	S.RES	RMC1/16S-221JTH (220)	B	36.7/23.3
R47	7030015910	S.RES	RMC1/16S-101JTH (100)	B	36.4/21.7
R48	7030016090	S.RES	RMC1/16S-223JTH (22 k)	B	39.5/12.8
R49	7030016390	S.RES	RMC1/16S-184JTH (180 k)	B	37.8/19.9
R50	7030016390	S.RES	RMC1/16S-184JTH (180 k)	B	36.2/19.9
R51	7030016250	S.RES	RMC1/16S-220JTH (22)	B	32.1/9.3
R52	7030015960	S.RES	RMC1/16S-472JTH (4.7 k)	B	30.9/7.2
R53	7030016000	S.RES	RMC1/16S-823JTH (82 k)	B	30.9/8.1
R55	7030016290	S.RES	RMC1/16S-222JTH (2.2 k)	B	17.5/26.4
R56	7030016050	S.RES	RMC1/16S-102JTH (1 k)	B	17.1/27.6
R57	7030016290	S.RES	RMC1/16S-222JTH (2.2 k)	B	15.9/26.4
R58	7030016370	S.RES	RMC1/16S-271JTH (270)	T	18.8/21.1
R59	7030016370	S.RES	RMC1/16S-271JTH (270)	T	17.9/21.1
R60	7030015990	S.RES	RMC1/16S-683JTH (68K)	T	14.6/9.0
R67	7030016110	S.RES	RMC1/16S-473JTH (47 k)	B	40.1/29.4
R400	7030016290	S.RES	RMC1/16S-222JTH (2.2 k)	B	64.6/5.3
R401	7030016440	S.RES	RMC1/16S-272JTH (2.7 k)	B	66.5/4.9
R402	7030016110	S.RES	RMC1/16S-473JTH (47 k)	B	92.7/19.8
R403	7030016110	S.RES	RMC1/16S-473JTH (47 k)	B	92.2/18.6
R404	7030016050	S.RES	RMC1/16S-102JTH (1 k)	B	92.1/28.0
R405	7030016050	S.RES	RMC1/16S-102JTH (1 k)	B	91.9/25.7
R406	7030016050	S.RES	RMC1/16S-102JTH (1 k)	B	92.6/23.5
R407	7030016050	S.RES	RMC1/16S-102JTH (1 k)	B	92.5/21.4
R409	7030015970	S.RES	RMC1/16S-103JTH (10 k)	B	90.1/15.8
R410	7030015970	S.RES	RMC1/16S-103JTH (10 k)	B	72.0/12.3
R411	7030015970	S.RES	RMC1/16S-103JTH (10 k)	B	72.0/13.3
R412	7030015960	S.RES	RMC1/16S-472JTH (4.7 k)	B	91.5/17.4
R413	7030015960	S.RES	RMC1/16S-472JTH (4.7 k)	B	92.4/17.4
R416	7030015900	S.RES	RMC1/16S-470JTH (47)	B	79.1/10.0
R417	7030015900	S.RES	RMC1/16S-470JTH (47)	B	78.2/10.0
R421	7030016060	S.RES	RMC1/16S-105JTH (1 M)	B	81.3/10.5
R425	7030016110	S.RES	RMC1/16S-473JTH (47 k)	B	89.4/9.6
R426	7030016330	S.RES	RMC1/16S-153JTH (15 k)	B	90.8/30.8
R427	7030016830	S.RES	RGC1/16SC153DTH (15.0 k)	B	92.3/30.0
R428	7030016560	S.RES	RMC1/16SJPTH	B	69.6/17.4
R429	7030015970	S.RES	RMC1/16S-103JTH (10 k)	B	73.5/7.9
R430	7030016180	S.RES	RMC1/16S-680JTH (68)	B	66.0/3.3
R702	7030016500	S.RES	RMC1/16S-562JTH (5.6 k)	B	29.9/33.9
R703	7030016000	S.RES	RMC1/16S-823JTH (82 k)	B	31.1/34.4
R704	7030016110	S.RES	RMC1/16S-473JTH (47 k)	B	33.4/34.5
R705	7030016110	S.RES	RMC1/16S-473JTH (47 k)	B	34.6/34.8
R706	7030015930	S.RES	RMC1/16S-471JTH (470)	B	23.1/45.6
R708	7030015980	S.RES	RMC1/16S-333JTH (33 k)	B	27.7/36.2
R712	7030016190	S.RES	RMC1/16S-273JTH (27 k)	B	21.4/44.2
R713	7030016110	S.RES	RMC1/16S-473JTH (47 k)	B	21.4/43.0
R715	7030015980	S.RES	RMC1/16S-333JTH (33 k)	T	37.1/2.1
R716	7030015970	S.RES	RMC1/16S-103JTH (10 k)	B	20.1/40.7
R717	7030015970	S.RES	RMC1/16S-103JTH (10 k)	B	24.1/40.7
R720	7030016050	S.RES	RMC1/16S-102JTH (1 k)	B	16.6/43.2
R721	7030016110	S.RES	RMC1/16S-473JTH (47 k)	B	14.5/44.1
R723	7030015970	S.RES	RMC1/16S-103JTH (10 k)	B	37.3/35.7
R724	7030016020	S.RES	RMC1/16S-104JTH (100 k)	B	37.7/34.5
R725	7030016340	S.RES	RMC1/16S-393JTH (39 k)	T	36.3/42.6
R726	7030015980	S.RES	RMC1/16S-333JTH (33 k)	T	40.9/35.4
R727	7030016350	S.RES	RMC1/16S-122JTH (1.2 k)	T	40.0/35.9
R728	7030016050	S.RES	RMC1/16S-102JTH (1 k)	T	40.0/34.3
R729	7030015910	S.RES	RMC1/16S-101JTH (100)	T	21.9/38.8
R731	7030016050	S.RES	RMC1/16S-102JTH (1 k)	B	16.6/41.3
R732	7030015970	S.RES	RMC1/16S-103JTH (10 k)	T	39.6/46.1
R733	7030016030	S.RES	RMC1/16S-154JTH (150 k)	B	34.8/37.4
R734	7030016340	S.RES	RMC1/16S-393JTH (39 k)	T	41.3/37.2

M.=Mounted side (T: Mounted on the Top side, B: Mounted on the Bottom side)
H/V LOCATION=See the BOARD LAYOUTS for details.

The underlined parts have been updated from the previous version of the addendum, or from the original page.

[MAIN UNIT] (for IC-V86 and IC-V86-T)

REF NO.	PART NO.	DESCRIPTION		M.	H/V LOCATION
R735	7030016050	S.RES	RMC1/16S-102JTH (1 k)	B	36.1/37.8
R738	7030016050	S.RES	RMC1/16S-102JTH (1 k)	B	13.9/40.3
R739	7030016330	S.RES	RMC1/16S-153JTH (15 k)	B	15.5/40.3
R740	7030016910	S.RES	RGC1/16SC393DTH (39 k)	T	8.7/31.7
R742	7030016330	S.RES	RMC1/16S-153JTH (15 k)	B	38.8/37.9
R745	7030016430	S.RES	RMC1/16S-392JTH (3.9 k)	B	15.5/39.4
R746	7030016830	S.RES	RGC1/16SC153DTH (15.0 k)	T	8.7/33.3
R750	7030016330	S.RES	RMC1/16S-153JTH (15 k)	B	39.5/36.3
R751	7030016020	S.RES	RMC1/16S-104JTH (100 k)	T	17.5/35.9
R752	7030016020	S.RES	RMC1/16S-104JTH (100 k)	T	16.6/35.9
R753	7030016020	S.RES	RMC1/16S-104JTH (100 k)	B	17.7/37.4
R759	7030015970	S.RES	RMC1/16S-103JTH (10 k)	B	47.1/42.1
R762	7030016810	S.RES	RGC1/16SC392DTH (3.90 k)	B	50.9/43.5
R763	7030017510	S.RES	RGC1/16SC272DTH (2.7 k)	B	52.5/43.5
R765	7030016050	S.RES	RMC1/16S-102JTH (1 k)	B	25.8/40.8
R767	7030016880	S.RES	RGC1/16SC223DTH (22.0 k)	B	50.9/44.4
R771	7030016110	S.RES	RMC1/16S-473JTH (47 k)	B	37.1/41.6
R773	7030016050	S.RES	RMC1/16S-102JTH (1 k)	B	37.1/42.5
R780	7030016110	S.RES	RMC1/16S-473JTH (47 k)	T	33.8/37.4
R781	7030016050	S.RES	RMC1/16S-102JTH (1 k)	T	35.0/37.7
R784	7030015960	S.RES	RMC1/16S-472JTH (4.7 k)	B	42.0/40.0
R785	7030015950	S.RES	RMC1/16S-152JTH (1.5 k)	B	41.5/42.4
R786	7030016410	S.RES	RMC1/16S-561JTH (560)	B	41.5/41.5
R787	7030016020	S.RES	RMC1/16S-104JTH (100 k)	B	41.1/40.0
R788	7030015970	S.RES	RMC1/16S-103JTH (10 k)	T	36.9/38.3
R789	7030016040	S.RES	RMC1/16S-224JTH (220 k)	T	37.9/37.1
R790	7030016020	S.RES	RMC1/16S-104JTH (100 k)	T	13.1/31.0
R791	7030016020	S.RES	RMC1/16S-104JTH (100 k)	T	14.0/31.0
R795	7030015980	S.RES	RMC1/16S-333JTH (33 k)	T	17.3/32.1
R796	7030016000	S.RES	RMC1/16S-823JTH (82 k)	T	17.7/28.8
R797	7030016110	S.RES	RMC1/16S-473JTH (47 k)	T	20.4/27.1
R798	7030016110	S.RES	RMC1/16S-473JTH (47 k)	T	22.0/27.1
R799	7030016060	S.RES	RMC1/16S-105JTH (1 M)	B	16.1/32.6
R800	7030016060	S.RES	RMC1/16S-105JTH (1 M)	B	16.3/31.4
R801	7030015950	S.RES	RMC1/16S-152JTH (1.5 k)	B	23.0/47.2
R803	7030015950	S.RES	RMC1/16S-152JTH (1.5 k)	B	31.1/33.5
R804	7030015990	S.RES	RMC1/16S-683JTH (68 k)	T	17.7/29.7
R805	7030016020	S.RES	RMC1/16S-104JTH (100 k)	T	21.6/30.6
R806	7030016060	S.RES	RMC1/16S-105JTH (1 M)	B	50.0/31.9
R807	7030016060	S.RES	RMC1/16S-105JTH (1 M)	B	50.9/32.6
R808	7030016110	S.RES	RMC1/16S-473JTH (47 k)	B	34.3/32.6
R809	7030015910	S.RES	RMC1/16S-101JTH (100)	T	20.6/31.7
R810	7030016020	S.RES	RMC1/16S-104JTH (100 k)	T	21.5/31.9
R811	7030016060	S.RES	RMC1/16S-105JTH (1 M)	B	18.4/44.3
R812	7030016060	S.RES	RMC1/16S-105JTH (1 M)	B	19.3/42.8
C19	4030022140	S.CER	GRM033B31H102KA12D	B	37.8/32.1
C20	4030022100	S.CER	GRM0332C1H100JA01D	B	32.8/26.4
C22	4030022140	S.CER	GRM033B31H102KA12D	B	50.2/19.5
C23	4030022160	S.CER	GRM033B31A104KE84D	B	36.3/27.1
C24	4030022160	S.CER	GRM033B31A104KE84D	B	50.8/19.5
C25	4030022260	S.CER	GRM033R60J105MEA2D	T	42.3/8.9
C26	4030022160	S.CER	GRM033B31A104KE84D	B	38.7/30.1
C28	4030022160	S.CER	GRM033B31A104KE84D	B	47.0/12.0
C29	4030022140	S.CER	GRM033B31H102KA12D	B	47.0/12.6
C32	4030022160	S.CER	GRM033B31A104KE84D	B	47.9/12.3
C33	4030022160	S.CER	GRM033B31A104KE84D	B	45.1/12.8
C35	4030022140	S.CER	GRM033B31H102KA12D	B	45.1/12.2
C36	4030022260	S.CER	GRM033R60J105MEA2D	B	39.3/26.7
C37	4550007520	S.TAN	F931A106MAABMA	B	44.6/8.9
C38	4030025320	S.CER	GRM0332C1H151JA01D	B	39.8/7.7
C42	4030022140	S.CER	GRM033B31H102KA12D	B	36.0/8.0
C45	4030022140	S.CER	GRM033B31H102KA12D	B	36.0/8.6
C46	4030022080	S.CER	GRM0332C1H101JA01D	B	37.9/9.8
C47	4030022140	S.CER	GRM033B31H102KA12D	B	39.7/11.0
C49	4030022140	S.CER	GRM033B31H102KA12D	B	36.6/22.5
C52	4030022120	S.CER	GRM0332C1H470JA01D	B	39.8/20.2
C53	4030022140	S.CER	GRM033B31H102KA12D	B	34.3/11.8
C54	4030022140	S.CER	GRM033B31H102KA12D	B	36.6/20.9
C57	4030022680	S.CER	0402N150J500CT	B	34.2/14.8
C58	4030023090	S.CER	0402B102K500CT	B	24.7/17.0
C59	4030022920	S.CER	0402N820J500CT	B	33.5/13.5
C62	4030022740	S.CER	0402N220J500CT	B	20.9/24.2
C64	4030022140	S.CER	GRM033B31H102KA12D	B	31.1/8.9
C65	4030023330	S.CER	0603N4R0B500CT	B	21.4/9.8
C67	4030023720	S.CER	0603N470J500CT	B	22.6/9.8
C68	4030022640	S.CER	0402N101J500CT	B	19.1/26.4
C69	4030023520	S.CER	0603N180J500CT	B	20.2/8.9
C71	4030022160	S.CER	GRM033B31A104KE84D	B	16.1/27.8
C73	4030023090	S.CER	0402B102K500CT	B	16.1/13.8
C75	4030022560	S.CER	0402N5R0B500CT	B	16.8/23.8
C76	4030023520	S.CER	0603N180J500CT	B	19.0/8.9
C79	4030022140	S.CER	GRM033B31H102KA12D	T	18.2/20.0
C81	4030022700	S.CER	0402N180J500CT	B	16.1/9.4
C82	4030022640	S.CER	0402N101J500CT	B	14.2/25.2
C84	4030023090	S.CER	0402B102K500CT	B	13.3/16.3
C86	4030022680	S.CER	0402N150J500CT	B	10.3/19.3
C88	4030022520	S.CER	0402N1R0B500CT	B	9.1/18.9
C89	4030022700	S.CER	0402N180J500CT	B	13.3/17.4
C90	4030022630	S.CER	0402N100C500CT	B	15.0/21.6
C93	4030022700	S.CER	0402N180J500CT	B	13.3/19.0
C94	4030017630	S.CER	C1005 CH 1H 120J-T	B	7.3/14.2
C95	4030022770	S.CER	0402N270J500CT	B	6.0/14.7
C101	4030022590	S.CER	0402N8R0C500CT	B	7.3/12.6
C109	4030022260	S.CER	GRM033R60J105MEA2D	B	63.6/8.5
C110	4030022260	S.CER	GRM033R60J105MEA2D	B	64.4/8.5
C113	4030022140	S.CER	GRM033B31H102KA12D	B	61.2/12.8
C114	4030022090	S.CER	GRM0332C1H330JA01D	B	61.2/14.0
C115	4030022160	S.CER	GRM033B31A104KE84D	B	42.6/17.1
C116	4030022140	S.CER	GRM033B31H102KA12D	B	42.6/16.5
C117	4030022160	S.CER	GRM033B31A104KE84D	B	52.3/16.3

Eqv.= This component is equivalent to the REF No. component listed above, and may be substituted on parts orders and repairs.

[MAIN UNIT] (for IC-V86 and IC-V86-T)

REF NO.	PART NO.	DESCRIPTION		M.	H/V LOCATION
C118	4030022140	S.CER	GRM033B31H102KA12D	B	52.3/16.9
C120	4030022530	S.CER	0402N2R0B500CT	B	43.5/14.8
C122	4030022530	S.CER	0402N2R0B500CT	B	46.0/12.0
C124	4030022530	S.CER	0402N2R0B500CT	T	40.7/16.2
C405	4030022160	S.CER	GRM033B31A104KE84D	B	71.8/19.6
C408	4030025440	S.CER	GRM0332C1E271JA01D	B	70.8/17.1
C409	4030022160	S.CER	GRM033B31A104KE84D	B	70.7/16.0
C410	4030022160	S.CER	GRM033B31A104KE84D	B	71.8/20.2
C411	4030022160	S.CER	GRM033B31A104KE84D	B	71.0/22.5
C412	4030022160	S.CER	GRM033B31A104KE84D	B	71.0/23.2
C413	4030025350	S.CER	GRM0332C1H120JA01D	B	80.3/7.8
C414	4030022160	S.CER	GRM033B31A104KE84D	B	70.4/15.1
C415	4030022160	S.CER	GRM033B31A104KE84D	B	71.0/26.5
C416	4030025350	S.CER	GRM0332C1H120JA01D	B	81.7/9.5
C417	4030022260	S.CER	GRM033R60J105MEA2D	B	76.8/9.7
C418	4030022160	S.CER	GRM033B31A104KE84D	B	76.8/10.3
C420	4030022260	S.CER	GRM033R60J105MEA2D	B	77.3/10.9
C421	4030022160	S.CER	GRM033B31A104KE84D	B	77.3/11.5
C425	4030025400	S.CER	GRM033R61A273KE84D	B	77.1/8.7
C426	4030022160	S.CER	GRM033B31A104KE84D	B	87.6/29.1
C427	4030022260	S.CER	GRM033R60J105MEA2D	B	84.8/11.1
C428	4030022160	S.CER	GRM033B31A104KE84D	B	90.1/14.0
C429	4550007520	S.TAN	F931A106MAABMA	B	80.5/36.5
C430	4030022140	S.CER	GRM033B31H102KA12D	B	64.6/20.2
C437	4030022140	S.CER	GRM033B31H102KA12D	B	83.3/11.1
C446	4030022140	S.CER	GRM033B31H102KA12D	B	84.0/11.1
C451	4030022120	S.CER	GRM0332C1H470JA01D	B	62.6/17.3
C452	4030022120	S.CER	GRM0332C1H470JA01D	B	62.0/18.0
C453	4030022120	S.CER	GRM0332C1H470JA01D	B	71.8/24.5
C454	4030022120	S.CER	GRM0332C1H470JA01D	B	64.0/15.9
C455	4030022120	S.CER	GRM0332C1H470JA01D	B	65.0/15.9
C456	4030022120	S.CER	GRM0332C1H470JA01D	B	87.8/13.1
C457	4030022120	S.CER	GRM0332C1H470JA01D	B	65.9/17.0
C458	4030022120	S.CER	GRM0332C1H470JA01D	B	70.2/20.3
C459	4030022120	S.CER	GRM0332C1H470JA01D	B	64.5/24.1
C460	4030022120	S.CER	GRM0332C1H470JA01D	B	65.4/24.2
C461	4030022120	S.CER	GRM0332C1H470JA01D	B	70.0/22.3
C462	4030022120	S.CER	GRM0332C1H470JA01D	B	69.4/23.4
C463	4030022120	S.CER	GRM0332C1H470JA01D	B	70.8/24.4
C464	4030022120	S.CER	GRM0332C1H470JA01D	B	70.2/25.0
C465	4030022120	S.CER	GRM0332C1H470JA01D	B	72.0/25.8
C466	4030022120	S.CER	GRM0332C1H470JA01D	B	74.7/29.5
C467	4030022120	S.CER	GRM0332C1H470JA01D	B	74.6/33.1
C468	4030022120	S.CER	GRM0332C1H470JA01D	B	60.3/35.3
C469	4030022120	S.CER	GRM0332C1H470JA01D	B	61.3/35.5
C470	4030022120	S.CER	GRM0332C1H470JA01D	B	62.2/35.5
C471	4030022120	S.CER	GRM0332C1H470JA01D	B	63.2/35.5
C472	4030022120	S.CER	GRM0332C1H470JA01D	B	69.0/35.3
C473	4030022120	S.CER	GRM0332C1H470JA01D	B	62.7/37.2
C474	4030022120	S.CER	GRM0332C1H470JA01D	B	62.0/37.8
C475	4030022120	S.CER	GRM0332C1H470JA01D	B	77.4/36.4
C477	4030022120	S.CER	GRM0332C1H470JA01D	B	85.5/33.7
C700	4030022260	S.CER	GRM033R60J105MEA2D	B	24.5/47.1
C702	4030022960	S.CER	0402B333K100CT	B	32.0/32.5
C703	4030022260	S.CER	GRM033R60J105MEA2D	B	32.3/33.7
C707	4030022260	S.CER	GRM033R60J105MEA2D	B	34.5/34.0
C708	4030023190	S.CER	0402B392K500CT	B	26.8/36.2
C710	4030022160	S.CER	GRM033B31A104KE84D	B	22.2/43.2
C711	4030022260	S.CER	GRM033R60J105MEA2D	B	25.6/34.7
C724	4030022260	S.CER	GRM033R60J105MEA2D	T	37.0/1.3
C726	4030022160	S.CER	GRM033B31A104KE84D	B	20.3/44.2
C731	4030022260	S.CER	GRM033R60J105MEA2D	B	36.9/34.4
C734	4030022160	S.CER	GRM033B31A104KE84D	T	38.8/46.0
C735	4030022260	S.CER	GRM033R60J105MEA2D	B	13.7/43.9
C738	4030022260	S.CER	GRM033R60J105MEA2D	T	40.4/46.0
C740	4030022260	S.CER	GRM033R60J105MEA2D	B	34.9/36.2
C741	4030025440	S.CER	GRM0332C1E271JA01D	T	41.2/36.4
C742	4030022150	S.CER	GRM033B31E103KA12D	B	14.1/39.5
C744	4030022950	S.CER	0402B273K100CT	T	17.5/33.7
C745	4030022260	S.CER	GRM033R60J105MEA2D	T	39.2/37.3
C747	4030022260	S.CER	GRM033R60J105MEA2D	T	42.4/37.5
C748	4030022260	S.CER	GRM033R60J105MEA2D	B	37.5/37.8
C749	4030022260	S.CER	GRM033R60J105MEA2D	T	17.7/37.4
C750	4030022160	S.CER	GRM033B31A104KE84D	B	38.7/37.1
C752	4030022160	S.CER	GRM033B31A104KE84D	B	38.4/36.0
C753	4030022160	S.CER	GRM033B31A104KE84D	T	17.1/34.8
C755	4030022160	S.CER	GRM033B31A104KE84D	B	16.8/38.0
C756	4030022160	S.CER	GRM033B31A104KE84D	B	47.0/41.3
C759	4550008220	S.TAN	F931C106MAA	B	10.2/44.8
C760	4030025550	S.CER	CL21A226MAQNNPE	B	48.8/41.0
C767	4520000020	S.NIO	NOJC227M006RWJV	T	27.6/35.2
C768	4030022260	S.CER	GRM033R60J105MEA2D	T	7.4/26.9
C769	4030022160	S.CER	GRM033B31A104KE84D	B	50.1/38.7
C772	4030022140	S.CER	GRM033B31H102KA12D	B	27.2/40.9
C774	4030022120	S.CER	GRM0332C1H470JA01D	B	26.6/40.9
C777	4030025550	S.CER	CL21A226MAQNNPE	B	54.8/41.1
C784	4030025440	S.CER	GRM0332C1E271JA01D	B	38.5/45.7
C792	4030025230	S.CER	TMK107BJ105KAHT	T	7.0/31.4
Eqv.	4030025510	S.CER	CL10B105KA8NNPC		
C793	4030025230	S.CER	TMK107BJ105KAHT	B	45.6/42.1
Eqv.	4030025510	S.CER	CL10B105KA8NNPC		
C794	4030025230	S.CER	TMK107BJ105KAHT	T	9.9/27.3
Eqv.	4030025510	S.CER	CL10B105KA8NNPC		
C798	4030022260	S.CER	GRM033R60J105MEA2D	B	40.3/40.2
C799	4030022260	S.CER	GRM033R60J105MEA2D	T	39.0/35.7
C800	4030022160	S.CER	GRM033B31A104KE84D	B	32.2/7.1
C802	4030022260	S.CER	GRM033R60J105MEA2D	T	19.8/30.9
C803	4030025320	S.CER	GRM0332C1H151JA01D	T	18.8/29.4
C804	4030022260	S.CER	GRM033R60J105MEA2D	T	22.5/28.6
C805	4030025370	S.CER	GRM033R61C104KE14D	B	15.0/33.0
C806	4030025320	S.CER	GRM0332C1H151JA01D	T	37.7/36.3
C807	4030022260	S.CER	GRM033R60J105MEA2D	T	39.0/35.1

M.=Mounted side (T: Mounted on the Top side, B: Mounted on the Bottom side)
H/V LOCATION=See the BOARD LAYOUTS for details.

The underlined parts have been updated from the previous version of the addendum, or from the original page.

[MAIN UNIT] (for IC-V86 and IC-V86-T)

REF NO.	PART NO.	DESCRIPTION		M.	H/V LOCATION
C808	4030022260	S.CER	GRM033R60J105MEA2D	T	41.2/46.0
C809	4030022260	S.CER	GRM033R60J105MEA2D	T	39.0/36.3
C810	4030022260	S.CER	GRM033R60J105MEA2D	B	22.1/47.5
C811	4550007520	S.TAN	F931A106MAABMA	B	25.1/43.8
C812	4030022260	S.CER	GRM033R60J105MEA2D	B	21.5/47.5
C813	4030023110	S.CER	0402B152K500CT	T	16.9/30.9
C814	4030022260	S.CER	GRM033R60J105MEA2D	B	50.9/31.1
C815	4030022160	S.CER	GRM033B31A104KE84D	B	33.2/32.9
C817	4030022260	S.CER	GRM033R60J105MEA2D	T	19.1/32.4
C818	4030022260	S.CER	GRM033R60J105MEA2D	T	19.2/30.9
C819	4030022260	S.CER	GRM033R60J105MEA2D	T	18.5/32.4
C820	4030022160	S.CER	GRM033B31A104KE84D	B	16.8/44.3
J700	6450000131	CON	HSJ1102-018540		
J701	6450002530	CON	HSJ4456-010320		
DS400	5030004550	LCD	GP11538A6		
DS401	5040003500	S.LED	HT-191 UYG-K828	T	52.8/4.6
DS402	5040003500	S.LED	HT-191 UYG-K828	T	48.3/4.6
MC700	7700003280	S.MIC	SPU0410HR5H-PB-7	T	36.6/6.6
S400	2250001090	ENC	ED08902OFK150S070C-2015		
Eqv.	7600000210	ENC	TP70N00E20-15F-1903 [#13]		
S401	2260003490	S.SWI	TAFG-12W-QR	B	17.4/1.9
EP1	8930101610	LCD	SRCN-4066-SP-N-W (SHJ)		
EP3	6910018460	S.BEA	MMZ1005Y102C-T	B	33.3/9.5
EP4	6910014690	S.BEA	MPZ1608S221A-T	B	24.5/20.0
EP400	6910021240	S.BEA	MMZ1005A152ET	B	78.9/38.3
EP700	6910018460	S.BEA	MMZ1005Y102C-T	B	24.0/45.6
EP701	6910018460	S.BEA	MMZ1005Y102C-T	B	18.7/45.5
EP702	6910019900	S.BEA	MPZ1608S601AT	B	26.6/42.1
EP703	6910016330	S.BEA	MMZ1005S 601CT-S	B	38.3/42.0
EP704	6910018460	S.BEA	MMZ1005Y102C-T	B	37.0/45.7

Eqv.= This component is equivalent to the REF No. component listed above, and may be substituted on parts orders and repairs.

M.=Mounted side (T: Mounted on the Top side, B: Mounted on the Bottom side)
H/V LOCATION=See the BOARD LAYOUTS for details.

The underlined parts have been updated from the previous version of the addendum, or from the original page.

[MAIN-A UNIT] (for IC-G86)

REF NO.	PART NO.	DESCRIPTION		M.	H/V LOCATION
IC1	1110007010	S.IC	NJM12904R-TE1-#ZZZB	B	34.7/29.4
IC3	1110010000	S.IC	AT1846S	B	47.4/16.1
IC400	1130019660	S.IC	BR24G128NUX-5TR	B	92.2/14.0
IC402	1140018490	S.IC	STM32L073VBT6	B	81.0/20.5
IC403	1110007780	S.IC	NJU7704F3-28A-TE1-#ZZZH	B	75.4/8.2
IC701	1110007630	S.IC	NJM2783V-TE1-#ZZZH	T	39.6/41.5
IC702	1110010010	S.IC	U2429G-S08-R	B	23.1/36.7
IC706	1110008450	S.IC	ISD8102SYI T&R	T	22.5/35.4
IC707	6910027810	S.DC	TPS561201DDCR	B	51.4/41.1
IC817	1110010140	S.IC	TLV9002IDGKR	B	31.2/36.7
IC818	1180004950	S.REG	XC6701B502MR-G	T	7.4/29.0
IC819	1110008890	S.IC	NJU7056F3-TE2-#ZZZH	T	20.2/29.7
IC820	1130007021	S.IC	TC7S66FU (TE85LF)	B	52.8/32.2
Q2	1590005410	S.TRA	DTC014YEBTL	B	42.2/31.7
Q4	1590005560	S.TRA	DTA014EEBTL	B	40.2/31.3
Q6	1530003322	S.TRA	2SC5108-YLF	B	37.6/8.0
Q7	1560002420	S.FET	RD01MUS2B-T513	B	37.2/15.8
Q8	1530003322	S.TRA	2SC5108-YLF	B	38.4/21.4
Q9	1560002460	S.FET	RD08MUS2-T512	B	29.6/13.4
Q10	1560002190	S.FET	RUM002N02T2L	B	39.2/28.0
Q12	1590005410	S.TRA	DTC014YEBTL	B	27.7/33.8
Q400	1530002851	S.TRA	2SC4116-BL (TE85RF)	B	64.2/3.5
Q401	1590005430	S.TRA	DTC044TEBTL	B	90.2/32.4
Q703	1590004220	S.TRA	DRA9123Y0L	B	21.6/45.8
Q704	1590005410	S.TRA	DTC014YEBTL	T	41.5/5.3
Q705	1590005410	S.TRA	DTC014YEBTL	B	18.1/41.0
Q706	1590004590	S.TRA	DMC506010R	B	14.5/42.1
Q707	1520001010	S.TRA	2SB1132G-R-AB3-R	B	10.1/41.3
Q711	1590005410	S.TRA	DTC014YEBTL	B	17.2/39.4
Q712	1590005410	S.TRA	DTC014YEBTL	B	73.1/38.1
Q716	1590005410	S.TRA	DTC014YEBTL	B	37.4/44.0
Q717	1510001270	S.TRA	2SAR502UBTL	B	37.3/39.7
Q718	1590005410	S.TRA	DTC014YEBTL	T	35.5/36.2
Q720	1510001270	S.TRA	2SAR502UBTL	T	31.9/37.1
Q721	1590004230	S.TRA	LMUN5213DW1T1G	B	40.2/44.1
Q722	1550000590	S.FET	UT6401G-AG6-R	T	10.9/30.4
Q723	1560002190	S.FET	RUM002N02T2L	B	13.2/31.4
Q724	1560002190	S.FET	RUM002N02T2L	T	20.5/31.8
Q725	1560002190	S.FET	RUM002N02T2L	B	17.9/42.9
D2	1750001810	S.DIO	L1SS400T1G	B	40.4/25.8
D3	1790001830	S.VAR	AVR-M1005C270MTAAB	B	25.5/20.1
D4	1720000701	S.VAR	1SV305 (TPH3F)	B	18.1/24.6
D5	1720000701	S.VAR	1SV305 (TPH3F)	B	16.3/25.4
D6	1750003940	S.DIO	RN142SMT2R	B	17.5/14.6
D7	1750003940	S.DIO	RN142SMT2R	B	15.7/20.4
D8	1750003940	S.DIO	RN142SMT2R	B	15.7/21.6
D9	1750003830	S.DIO	RB751CM-40T2R	B	15.0/22.8
D12	1750001810	S.DIO	L1SS400T1G	B	74.4/5.4
D13	1750003940	S.DIO	RN142SMT2R	B	17.5/15.8
D403	1750001810	S.DIO	L1SS400T1G	B	94.7/23.3
D404	1750001810	S.DIO	L1SS400T1G	B	94.7/26.9
D408	1750001810	S.DIO	L1SS400T1G	B	94.7/29.3
D409	1750001810	S.DIO	L1SS400T1G	B	92.2/26.9
D410	1750001810	S.DIO	L1SS400T1G	B	92.2/24.5
D411	1750001810	S.DIO	L1SS400T1G	B	92.2/22.4
D413	1750001820	S.DIO	LRB706F-40T1G	B	92.8/31.9
D700	1750003390	S.ZEN	RCLAMP1521P.TCT	T	8.4/34.9
D705	1750001810	S.DIO	L1SS400T1G	B	36.6/36.8
D706	1750001810	S.DIO	L1SS400T1G	B	35.9/34.9
D708	1750001810	S.DIO	L1SS400T1G	T	16.6/39.1
D711	1750003830	S.DIO	RB751CM-40T2R	B	73.4/40.2
D714	1750003830	S.DIO	RB751CM-40T2R	B	72.0/39.7
D717	1750001810	S.DIO	L1SS400T1G	B	10.5/31.0
D719	1750001810	S.DIO	L1SS400T1G	B	16.0/45.2
X2	6050014880	S.XTA	CR-1079 (13 MHz)	B	61.9/8.9
X400	6050014200	S.XTA	CR-1021 (12.288 MHz)	B	82.5/7.3
L3	6200013820	S.COI	MLK1005S27NJT	B	36.7/9.5
L4	6200013830	S.COI	MLK1005S22NJT	B	33.3/12.3
L5	6200017370	S.COI	SDWL1608CR10GSTF 0.1 U	B	38.8/23.3
L6	6200012540	S.COI	0.30-1.2-5TR 16.1N	B	24.1/15.8
L7	6200013010	S.COI	0.30-0.9-5TL 10.3N	B	23.8/13.3
L8	6200017390	S.COI	SDWL1608C47NJSTF 47N	B	19.6/24.6
L9	6200012390	S.COI	0.30-0.92-3TR 5.8N	B	21.3/13.2
L10	6200012470	S.COI	0.30-1.7-7TL 45.3N	B	20.5/10.8
L11	6200017560	S.COI	NLV25T-R82J-EF	T	20.8/16.5
L12	6200017390	S.COI	SDWL1608C47NJSTF 47N	B	13.7/24.2
L13	6200013820	S.COI	MLK1005S27NJT	B	21.8/24.2
L15	6200012470	S.COI	0.30-1.7-7TL 45.3N	B	11.6/18.7
L16	6200012470	S.COI	0.30-1.7-7TL 45.3N	B	17.3/18.1
L17	6200012760	S.COI	0.35-1.6-7TL 37.5N	B	7.5/18.2
L18	6200012780	S.COI	0.30-1.4-6TL 27.2N	B	9.2/13.7
L19	6200003640	S.COI	MLF1608E 100K-T	B	43.4/10.6
L22	6200003960	S.COI	MLF1608A 1R0K-T	B	62.0/11.6
L702	6200017010	S.COI	VLS252012CX-100M-1	B	52.2/38.2
L705	6200017010	S.COI	VLS252012CX-100M-1	B	46.4/39.7
R1	7510001730	S.THE	ERTJ0EP 473J	T	22.0/6.6
R2	7030014860	S.RES	RGC1/16SC104DTH (100 k)	T	21.6/5.3
R4	7030021060	S.RES	MCR25JZHFL R150 (0.15)	B	29.4/26.9
R8	7030015520	S.RES	RMC1/16JPTP	B	65.4/9.2
R10	7030016550	S.RES	RMC1/16SK154FTH (150 k)	B	31.5/26.4
R11	7030016560	S.RES	RMC1/16SJPTH	B	61.5/10.5
R12	7030016550	S.RES	RMC1/16SK154FTH (150 k)	B	29.8/30.1

Eqv.= This component is equivalent to the REF No. component listed above, and may be substituted on parts orders and repairs.

[MAIN-A UNIT] (for IC-G86)

REF NO.	PART NO.	DESCRIPTION		M.	H/V LOCATION
R13	7030017370	S.RES	RGC1/16SC183DTH (18 k)	B	31.5/28.0
R14	7030015980	S.RES	RMC1/16S-333JTH (33 k)	B	38.7/31.5
R16	7030016030	S.RES	RMC1/16S-154JTH (150 k)	B	36.7/31.8
R17	7030015990	S.RES	RMC1/16S-683JTH (68 k)	B	36.7/32.7
R18	7030015960	S.RES	RMC1/16S-472JTH (4.7 k)	B	76.5/4.4
R19	7030015960	S.RES	RMC1/16S-472JTH (4.7 k)	B	76.5/5.4
R20	7030016740	S.RES	RMC1/16SK474DTH (470 k)	B	31.6/30.1
R21	7030016740	S.RES	RMC1/16SK474DTH (470 k)	B	33.0/27.2
R23	7030016360	S.RES	RMC1/16S-123JTH (12 k)	B	33.0/25.6
R24	7030015900	S.RES	RMC1/16S-470JTH (47)	B	52.9/17.9
R26	7030016030	S.RES	RMC1/16S-154JTH (150 k)	B	37.7/30.0
R27	7030016050	S.RES	RMC1/16S-102JTH (1 k)	B	50.9/14.6
R28	7030017370	S.RES	RGC1/16SC183DTH (18 k)	B	30.7/30.1
R30	7030016050	S.RES	RMC1/16S-102JTH (1 k)	B	37.7/28.4
R32	7030016120	S.RES	RMC1/16S-682JTH (6.8 k)	B	40.9/27.7
R33	7030016110	S.RES	RMC1/16S-473JTH (47 k)	B	43.2/18.0
R36	7030015910	S.RES	RMC1/16S-101JTH (100)	B	39.5/9.1
R37	7030016120	S.RES	RMC1/16S-682JTH (6.8 k)	B	39.0/7.9
R38	7030016150	S.RES	RMC1/16S-100JTH (10)	B	35.8/7.2
R41	7030016180	S.RES	RMC1/16S-680JTH (68)	B	38.1/11.1
R42	7030016510	S.RES	RMC1/16S-4R7JTH (4.7)	B	38.2/12.3
R44	7030016190	S.RES	RMC1/16S-273JTH (27 k)	B	39.5/11.9
R45	7030016250	S.RES	RMC1/16S-220JTH (22)	B	38.5/24.6
R46	7030015920	S.RES	RMC1/16S-221JTH (220)	B	36.7/23.3
R47	7030015910	S.RES	RMC1/16S-101JTH (100)	B	36.4/21.7
R48	7030016090	S.RES	RMC1/16S-223JTH (22 k)	B	39.5/12.8
R49	7030016390	S.RES	RMC1/16S-184JTH (180 k)	B	37.8/19.9
R50	7030016390	S.RES	RMC1/16S-184JTH (180 k)	B	36.2/19.9
R51	7030016250	S.RES	RMC1/16S-220JTH (22)	B	32.1/9.3
R52	7030016300	S.RES	RMC1/16S-332JTH (3.3 k)	B	30.9/7.2
R53	7030016000	S.RES	RMC1/16S-823JTH (82 k)	B	30.9/8.1
R55	7030016290	S.RES	RMC1/16S-222JTH (2.2 k)	B	17.5/26.4
R56	7030016050	S.RES	RMC1/16S-102JTH (1 k)	B	17.1/27.6
R57	7030016290	S.RES	RMC1/16S-222JTH (2.2 k)	B	15.9/26.4
R58	7030016370	S.RES	RMC1/16S-271JTH (270)	T	21.9/19.2
R59	7030016370	S.RES	RMC1/16S-271JTH (270)	T	21.0/19.2
R60	7030015990	S.RES	RMC1/16S-683JTH (68 k)	T	14.6/9.0
R67	7030016110	S.RES	RMC1/16S-473JTH (47 k)	B	40.1/29.4
R400	7030016290	S.RES	RMC1/16S-222JTH (2.2 k)	B	64.6/5.3
R401	7030016440	S.RES	RMC1/16S-272JTH (2.7 k)	B	66.5/4.9
R402	7030016110	S.RES	RMC1/16S-473JTH (47 k)	B	92.7/19.8
R403	7030016110	S.RES	RMC1/16S-473JTH (47 k)	B	92.2/18.6
R404	7030016050	S.RES	RMC1/16S-102JTH (1 k)	B	92.1/28.0
R405	7030016050	S.RES	RMC1/16S-102JTH (1 k)	B	91.9/25.7
R406	7030016050	S.RES	RMC1/16S-102JTH (1 k)	B	92.6/23.5
R407	7030016050	S.RES	RMC1/16S-102JTH (1 k)	B	92.5/21.4
R409	7030015970	S.RES	RMC1/16S-103JTH (10 k)	B	90.1/15.8
R410	7030015970	S.RES	RMC1/16S-103JTH (10 k)	B	72.0/12.3
R411	7030015970	S.RES	RMC1/16S-103JTH (10 k)	B	72.0/13.3
R412	7030015960	S.RES	RMC1/16S-472JTH (4.7 k)	B	91.5/17.4
R413	7030015960	S.RES	RMC1/16S-472JTH (4.7 k)	B	92.4/17.4
R416	7030015900	S.RES	RMC1/16S-470JTH (47)	B	79.1/10.0
R417	7030015900	S.RES	RMC1/16S-470JTH (47)	B	78.2/10.0
R421	7030016060	S.RES	RMC1/16S-105JTH (1 M)	B	81.3/10.5
R425	7030016110	S.RES	RMC1/16S-473JTH (47 k)	B	89.4/9.6
R426	7030016330	S.RES	RMC1/16S-153JTH (15 k)	B	90.8/30.8
R427	7030016830	S.RES	RGC1/16SC153DTH (15.0 k)	B	92.3/30.0
R428	7030016560	S.RES	RMC1/16SJPTH	B	69.6/17.9
R429	7030015970	S.RES	RMC1/16S-103JTH (10 k)	B	73.5/7.9
R430	7030016180	S.RES	RMC1/16S-680JTH (68)	B	66.0/3.3
R702	7030016500	S.RES	RMC1/16S-562JTH (5.6 k)	B	29.9/33.9
R703	7030016000	S.RES	RMC1/16S-823JTH (82 k)	B	31.1/34.4
R704	7030016110	S.RES	RMC1/16S-473JTH (47 k)	B	33.4/34.5
R705	7030016110	S.RES	RMC1/16S-473JTH (47 k)	B	34.6/34.8
R706	7030015930	S.RES	RMC1/16S-471JTH (470)	B	23.1/45.6
R708	7030015980	S.RES	RMC1/16S-333JTH (33 k)	B	27.7/36.2
R712	7030016190	S.RES	RMC1/16S-273JTH (27 k)	B	21.4/44.2
R713	7030016110	S.RES	RMC1/16S-473JTH (47 k)	B	21.4/43.0
R715	7030015980	S.RES	RMC1/16S-333JTH (33 k)	T	37.1/2.1
R716	7030015970	S.RES	RMC1/16S-103JTH (10 k)	B	21.2/31.9
R717	7030015970	S.RES	RMC1/16S-103JTH (10 k)	B	20.2/40.2
R720	7030016050	S.RES	RMC1/16S-102JTH (1 k)	B	16.6/43.2
R721	7030016110	S.RES	RMC1/16S-473JTH (47 k)	B	14.5/44.1
R723	7030015970	S.RES	RMC1/16S-103JTH (10 k)	B	37.3/35.7
R724	7030016020	S.RES	RMC1/16S-104JTH (100 k)	B	37.7/34.5
R725	7030016340	S.RES	RMC1/16S-393JTH (39 k)	T	36.3/42.6
R726	7030015980	S.RES	RMC1/16S-333JTH (33 k)	T	40.9/35.4
R727	7030016350	S.RES	RMC1/16S-122JTH (1.2 k)	T	40.0/35.9
R728	7030016050	S.RES	RMC1/16S-102JTH (1 k)	T	40.0/34.3
R729	7030015910	S.RES	RMC1/16S-101JTH (100)	T	22.6/38.7
R731	7030016050	S.RES	RMC1/16S-102JTH (1 k)	B	16.5/41.5
R732	7030015970	S.RES	RMC1/16S-103JTH (10 k)	T	39.6/46.1
R733	7030016030	S.RES	RMC1/16S-154JTH (150 k)	B	34.8/37.4
R734	7030016340	S.RES	RMC1/16S-393JTH (39 k)	T	41.3/37.2
R735	7030016050	S.RES	RMC1/16S-102JTH (1 k)	B	36.1/37.8
R738	7030016050	S.RES	RMC1/16S-102JTH (1 k)	B	13.9/40.3
R739	7030016330	S.RES	RMC1/16S-153JTH (15 k)	B	15.5/40.3
R740	7030016910	S.RES	RGC1/16SC393DTH (39 k)	T	8.7/31.7
R742	7030016330	S.RES	RMC1/16S-153JTH (15 k)	B	38.8/37.9
R745	7030016430	S.RES	RMC1/16S-392JTH (3.9 k)	B	15.5/39.4
R746	7030016830	S.RES	RGC1/16SC153DTH (15.0 k)	T	8.7/33.3
R750	7030016330	S.RES	RMC1/16S-153JTH (15 k)	B	39.5/36.3
R751	7030016020	S.RES	RMC1/16S-104JTH (100 k)	T	17.6/37.2
R752	7030016020	S.RES	RMC1/16S-104JTH (100 k)	T	16.3/38.0
R753	7030016020	S.RES	RMC1/16S-104JTH (100 k)	B	18.6/38.1
R759	7030015970	S.RES	RMC1/16S-103JTH (10 k)	B	47.1/42.1
R762	7030016810	S.RES	RGC1/16SC392DTH (3.90 k)	B	50.9/43.5
R763	7030017510	S.RES	RGC1/16SC272DTH (2.7 k)	B	52.5/43.5
R765	7030016050	S.RES	RMC1/16S-102JTH (1 k)	B	25.8/40.8
R767	7030016880	S.RES	RGC1/16SC223DTH (22.0 k)	B	50.9/44.4
R771	7030016110	S.RES	RMC1/16S-473JTH (47 k)	B	37.1/41.6
R773	7030016050	S.RES	RMC1/16S-102JTH (1 k)	B	37.1/42.5

M.=Mounted side (T: Mounted on the Top side, B: Mounted on the Bottom side)
H/V LOCATION=See the BOARD LAYOUTS for details.

The underlined parts have been updated from the previous version of the addendum, or from the original page.

[MAIN-A UNIT] (for IC-G86)

REF NO.	PART NO.	DESCRIPTION		M.	H/V LOCATION
R780	7030016110	S.RES	RMC1/16S-473JTH (47 k)	T	33.8/37.4
R781	7030016050	S.RES	RMC1/16S-102JTH (1 k)	T	35.0/37.7
R784	7030015960	S.RES	RMC1/16S-472JTH (4.7 k)	B	42.0/40.0
R785	7030015950	S.RES	RMC1/16S-152JTH (1.5 k)	B	41.5/42.4
R786	7030016410	S.RES	RMC1/16S-561JTH (560)	B	41.5/41.5
R787	7030016020	S.RES	RMC1/16S-104JTH (100 k)	B	41.1/40.0
R788	7030015970	S.RES	RMC1/16S-103JTH (10 k)	T	36.9/38.3
R789	7030016040	S.RES	RMC1/16S-224JTH (220 k)	T	37.9/37.1
R790	7030016020	S.RES	RMC1/16S-104JTH (100 k)	T	13.1/31.0
R791	7030016020	S.RES	RMC1/16S-104JTH (100 k)	T	14.0/31.0
R795	7030015980	S.RES	RMC1/16S-333JTH (33 k)	B	23.3/30.4
R796	7030016000	S.RES	RMC1/16S-823JTH (82 k)	B	21.6/30.0
R797	7030016110	S.RES	RMC1/16S-473JTH (47 k)	T	20.3/28.0
R798	7030016110	S.RES	RMC1/16S-473JTH (47 k)	T	21.9/28.0
R799	7030016060	S.RES	RMC1/16S-105JTH (1 M)	B	11.7/30.0
R800	7030016060	S.RES	RMC1/16S-105JTH (1 M)	B	11.7/29.1
R801	7030015950	S.RES	RMC1/16S-152JTH (1.5 k)	B	23.0/47.2
R803	7030015950	S.RES	RMC1/16S-152JTH (1.5 k)	B	31.1/33.5
R804	7030015990	S.RES	RMC1/16S-683JTH (68 k)	B	20.4/29.6
R805	7030016020	S.RES	RMC1/16S-104JTH (100 k)	T	17.9/30.3
R806	7030016060	S.RES	RMC1/16S-105JTH (1 M)	B	50.0/31.9
R807	7030016060	S.RES	RMC1/16S-105JTH (1 M)	B	50.9/32.6
R808	7030016110	S.RES	RMC1/16S-473JTH (47 k)	B	34.3/32.6
R809	7030015910	S.RES	RMC1/16S-101JTH (100)	T	19.2/32.2
R810	7030016020	S.RES	RMC1/16S-104JTH (100 k)	T	17.9/32.2
R811	7030016060	S.RES	RMC1/16S-105JTH (1 M)	B	18.4/44.3
R812	7030016060	S.RES	RMC1/16S-105JTH (1 M)	B	19.3/42.8
C4	4030022140	S.CER	GRM033B31H102KA12D	B	28.6/30.1
C19	4030022140	S.CER	GRM033B31H102KA12D	B	37.8/32.1
C20	4030022100	S.CER	GRM0332C1H100JA01D	B	32.8/26.4
C22	4030022140	S.CER	GRM033B31H102KA12D	B	50.2/19.5
C23	4030022160	S.CER	GRM033B31A104KE84D	B	35.7/27.1
C24	4030022160	S.CER	GRM033B31A104KE84D	B	50.8/19.5
C25	4030022260	S.CER	GRM033R60J105MEA2D	T	42.3/8.9
C26	4030022160	S.CER	GRM033B31A104KE84D	B	38.5/30.1
C28	4030022160	S.CER	GRM033B31A104KE84D	B	47.0/12.0
C29	4030022140	S.CER	GRM033B31H102KA12D	B	47.0/12.6
C32	4030022160	S.CER	GRM033B31A104KE84D	B	47.9/12.3
C33	4030022160	S.CER	GRM033B31A104KE84D	B	45.1/12.8
C35	4030022140	S.CER	GRM033B31H102KA12D	B	45.1/12.2
C36	4030022260	S.CER	GRM033R60J105MEA2D	B	39.3/26.7
C37	4550007520	S.TAN	F931A106MAABMA	B	44.6/8.9
C38	4030022090	S.CER	GRM0332C1H330JA01D	B	39.9/7.9
C42	4030022140	S.CER	GRM033B31H102KA12D	B	36.0/8.0
C45	4030022140	S.CER	GRM033B31H102KA12D	B	36.0/8.6
C46	4030022080	S.CER	GRM0332C1H101JA01D	B	37.9/9.9
C47	4030022140	S.CER	GRM033B31H102KA12D	B	39.5/11.1
C49	4030022140	S.CER	GRM033B31H102KA12D	B	36.6/22.5
C52	4030022120	S.CER	GRM0332C1H470JA01D	B	39.8/20.2
C53	4030022140	S.CER	GRM033B31H102KA12D	B	34.3/11.8
C54	4030022140	S.CER	GRM033B31H102KA12D	B	36.6/20.9
C57	4030022630	S.CER	0402N100C500CT	B	34.2/14.8
C58	4030023090	S.CER	0402B102K500CT	B	26.1/17.5
C59	4030022920	S.CER	0402N820J500CT	B	33.5/13.5
C62	4030022740	S.CER	0402N220J500CT	B	20.9/24.2
C64	4030022140	S.CER	GRM033B31H102KA12D	B	31.1/8.9
C65	4030023450	S.CER	0603N100D500CT	B	22.9/10.9
C67	4030023700	S.CER	0603N390J500CT	B	24.1/10.9
C68	4030022640	S.CER	0402N101J500CT	B	19.1/26.4
C69	4030023500	S.CER	0603N150J500CT	B	20.9/7.5
C71	4030022160	S.CER	GRM033B31A104KE84D	B	16.1/27.9
C73	4030023090	S.CER	0402B102K500CT	B	18.8/13.6
C75	4030022560	S.CER	0402N5R0B500CT	B	16.8/23.8
C76	4030023520	S.CER	0603N180J500CT	B	20.9/8.7
C79	4030022140	S.CER	GRM033B31H102KA12D	T	22.2/18.1
C81	4030022700	S.CER	0402N180J500CT	B	18.8/12.7
C82	4030022640	S.CER	0402N101J500CT	B	14.0/26.5
C84	4030023090	S.CER	0402B102K500CT	B	14.9/16.8
C86	4030022660	S.CER	0402N120J500CT	B	12.8/20.9
C88	4030022520	S.CER	0402N1R0B500CT	B	12.4/16.8
C89	4030022700	S.CER	0402N180J500CT	B	15.2/18.0
C90	4030022630	S.CER	0402N100C500CT	B	15.4/24.1
C92	4030022530	S.CER	0402N2R0B500CT	B	10.4/20.9
C93	4030022700	S.CER	0402N180J500CT	B	15.1/19.3
C94	4030022580	S.CER	0402N7R0C500CT	B	9.4/18.4
C95	4030022740	S.CER	0402N220J500CT	B	9.4/20.0
C101	4030022740	S.CER	0402N220J500CT	B	7.5/15.8
C109	4030022260	S.CER	GRM033R60J105MEA2D	B	63.6/8.5
C110	4030022260	S.CER	GRM033R60J105MEA2D	B	64.4/8.5
C113	4030022140	S.CER	GRM033B31H102KA12D	B	61.2/12.8
C114	4030025320	S.CER	GRM0332C1H151JA01D	B	61.2/14.0
C115	4030022160	S.CER	GRM033B31A104KE84D	B	42.6/17.1
C116	4030022140	S.CER	GRM033B31H102KA12D	B	42.6/16.5
C117	4030022160	S.CER	GRM033B31A104KE84D	B	52.3/16.3
C118	4030022140	S.CER	GRM033B31H102KA12D	B	52.3/16.9
C120	4030022530	S.CER	0402N2R0B500CT	B	43.5/14.8
C122	4030022530	S.CER	0402N2R0B500CT	B	46.0/12.0
C124	4030022530	S.CER	0402N2R0B500CT	T	40.7/16.2
C125	4030022630	S.CER	0402N100C500CT	B	7.5/14.9
C126	4030022560	S.CER	0402N5R0B500CT	B	7.4/12.1
C405	4030022160	S.CER	GRM033B31A104KE84D	B	71.8/19.6
C408	4030025440	S.CER	GRM0332C1E271JA01D	B	70.7/17.6
C409	4030022160	S.CER	GRM033B31A104KE84D	B	70.7/16.6
C410	4030022160	S.CER	GRM033B31A104KE84D	B	71.8/20.2
C411	4030022160	S.CER	GRM033B31A104KE84D	B	71.0/22.5
C412	4030022160	S.CER	GRM033B31A104KE84D	B	71.0/23.2
C413	4030025350	S.CER	GRM0332C1H120JA01D	B	80.3/7.8
C414	4030022160	S.CER	GRM033B31A104KE84D	B	70.4/15.1
C415	4030022160	S.CER	GRM033B31A104KE84D	B	71.0/26.5
C416	4030025350	S.CER	GRM0332C1H120JA01D	B	81.7/9.5

Eqv.= This component is equivalent to the REF No. component listed above, and may be substituted on parts orders and repairs.

[MAIN-A UNIT] (for IC-G86)

REF NO.	PART NO.	DESCRIPTION		M.	H/V LOCATION
C417	4030022260	S.CER	GRM033R60J105MEA2D	B	76.8/9.7
C418	4030022160	S.CER	GRM033B31A104KE84D	B	76.8/10.3
C420	4030022260	S.CER	GRM033R60J105MEA2D	B	77.3/10.9
C421	4030022160	S.CER	GRM033B31A104KE84D	B	77.3/11.5
C425	4030025400	S.CER	GRM033R61A273KE84D	B	77.1/8.7
C426	4030022160	S.CER	GRM033B31A104KE84D	B	87.6/29.1
C427	4030022260	S.CER	GRM033R60J105MEA2D	B	84.8/11.1
C428	4030022160	S.CER	GRM033B31A104KE84D	B	90.1/14.0
C429	4550007520	S.TAN	F931A106MAABMA	B	80.5/36.5
C430	4030022140	S.CER	GRM033B31H102KA12D	B	64.6/20.2
C437	4030022140	S.CER	GRM033B31H102KA12D	B	83.3/11.1
C446	4030022140	S.CER	GRM033B31H102KA12D	B	84.0/11.1
C451	4030022120	S.CER	GRM0332C1H470JA01D	B	62.6/17.3
C452	4030022120	S.CER	GRM0332C1H470JA01D	B	62.0/18.0
C453	4030022120	S.CER	GRM0332C1H470JA01D	B	71.8/24.5
C454	4030022120	S.CER	GRM0332C1H470JA01D	B	64.0/15.9
C455	4030022120	S.CER	GRM0332C1H470JA01D	B	65.0/15.9
C456	4030022120	S.CER	GRM0332C1H470JA01D	B	87.8/13.1
C457	4030022120	S.CER	GRM0332C1H470JA01D	B	65.9/17.0
C458	4030022120	S.CER	GRM0332C1H470JA01D	B	70.2/20.3
C459	4030022120	S.CER	GRM0332C1H470JA01D	B	64.5/24.1
C460	4030022120	S.CER	GRM0332C1H470JA01D	B	65.4/24.2
C461	4030022120	S.CER	GRM0332C1H470JA01D	B	70.0/22.3
C462	4030022120	S.CER	GRM0332C1H470JA01D	B	69.4/23.4
C463	4030022120	S.CER	GRM0332C1H470JA01D	B	70.8/24.4
C464	4030022120	S.CER	GRM0332C1H470JA01D	B	70.2/25.0
C465	4030022120	S.CER	GRM0332C1H470JA01D	B	72.0/25.8
C466	4030022120	S.CER	GRM0332C1H470JA01D	B	74.7/29.5
C467	4030022120	S.CER	GRM0332C1H470JA01D	B	74.6/33.1
C468	4030022120	S.CER	GRM0332C1H470JA01D	B	60.3/35.3
C469	4030022120	S.CER	GRM0332C1H470JA01D	B	61.3/35.5
C470	4030022120	S.CER	GRM0332C1H470JA01D	B	62.2/35.5
C471	4030022120	S.CER	GRM0332C1H470JA01D	B	63.2/35.5
C472	4030022120	S.CER	GRM0332C1H470JA01D	B	69.0/35.3
C473	4030022120	S.CER	GRM0332C1H470JA01D	B	62.7/37.2
C474	4030022120	S.CER	GRM0332C1H470JA01D	B	62.0/37.8
C475	4030022120	S.CER	GRM0332C1H470JA01D	B	77.4/36.4
C477	4030022120	S.CER	GRM0332C1H470JA01D	B	85.5/33.7
C700	4030022260	S.CER	GRM033R60J105MEA2D	B	24.5/47.1
C702	4030022960	S.CER	0402B333K100CT	B	32.0/32.5
C703	4030022260	S.CER	GRM033R60J105MEA2D	B	32.3/33.7
C707	4030022260	S.CER	GRM033R60J105MEA2D	B	34.5/34.0
C708	4030023190	S.CER	0402B392K500CT	B	26.8/36.2
C710	4030022160	S.CER	GRM033B31A104KE84D	B	22.2/43.2
C711	4030022260	S.CER	GRM033R60J105MEA2D	B	26.4/34.8
C724	4030022260	S.CER	GRM033R60J105MEA2D	T	37.0/1.3
C726	4030022160	S.CER	GRM033B31A104KE84D	B	20.3/44.2
C731	4030022260	S.CER	GRM033R60J105MEA2D	B	36.9/34.4
C734	4030022160	S.CER	GRM033B31A104KE84D	T	38.8/46.0
C735	4030022260	S.CER	GRM033R60J105MEA2D	B	13.7/43.9
C738	4030022260	S.CER	GRM033R60J105MEA2D	T	40.4/46.0
C740	4030022260	S.CER	GRM033R60J105MEA2D	B	34.9/36.2
C741	4030025440	S.CER	GRM0332C1E271JA01D	T	41.2/36.4
C742	4030022150	S.CER	GRM033B31E103KA12D	B	14.1/39.5
C744	4030022950	S.CER	0402B273K100CT	B	23.3/32.0
C745	4030022260	S.CER	GRM033R60J105MEA2D	T	39.2/37.3
C747	4030022260	S.CER	GRM033R60J105MEA2D	T	42.4/37.5
C748	4030022260	S.CER	GRM033R60J105MEA2D	B	37.5/37.8
C749	4030022260	S.CER	GRM033R60J105MEA2D	T	18.4/36.6
C750	4030022160	S.CER	GRM033B31A104KE84D	B	38.7/37.1
C752	4030022160	S.CER	GRM033B31A104KE84D	B	38.4/36.0
C753	4030022160	S.CER	GRM033B31A104KE84D	T	17.3/35.6
C755	4030022160	S.CER	GRM033B31A104KE84D	B	16.8/38.0
C756	4030022160	S.CER	GRM033B31A104KE84D	B	47.0/41.3
C759	4550008220	S.TAN	F931C106MAA	B	10.2/44.8
C760	4030025550	S.CER	CL21A226MAQNNPE	B	48.8/41.0
C767	4520000020	S.NIO	NOJC227M006RWJV	T	28.5/35.2
C768	4030022260	S.CER	GRM033R60J105MEA2D	T	7.4/26.9
C769	4030022160	S.CER	GRM033B31A104KE84D	B	50.1/38.7
C772	4030022140	S.CER	GRM033B31H102KA12D	B	27.2/40.9
C774	4030022120	S.CER	GRM0332C1H470JA01D	B	26.6/40.9
C777	4030025550	S.CER	CL21A226MAQNNPE	B	54.8/41.1
C784	4030025440	S.CER	GRM0332C1E271JA01D	B	38.5/45.7
C792	4030025230	S.CER	TMK107BJ105KAHT	T	7.0/31.4
C793	4030025230	S.CER	TMK107BJ105KAHT	B	45.6/42.1
C794	4030025230	S.CER	TMK107BJ105KAHT	T	9.9/27.3
C798	4030022260	S.CER	GRM033R60J105MEA2D	B	40.3/40.2
C799	4030022260	S.CER	GRM033R60J105MEA2D	T	39.0/35.7
C800	4030022160	S.CER	GRM033B31A104KE84D	B	32.2/7.1
C802	4030022260	S.CER	GRM033R60J105MEA2D	T	18.4/31.3
C803	4030025320	S.CER	GRM0332C1H151JA01D	B	20.2/30.5
C804	4030022260	S.CER	GRM033R60J105MEA2D	T	21.9/29.3
C805	4030025370	S.CER	GRM033R61C104KE14D	B	12.0/31.3
C806	4030025320	S.CER	GRM0332C1H151JA01D	T	37.7/36.3
C807	4030022260	S.CER	GRM033R60J105MEA2D	T	39.0/35.1
C808	4030022260	S.CER	GRM033R60J105MEA2D	T	41.2/46.0
C809	4030022260	S.CER	GRM033R60J105MEA2D	T	39.0/36.3
C810	4030022260	S.CER	GRM033R60J105MEA2D	B	22.1/47.5
C811	4550007520	S.TAN	F931A106MAABMA	B	25.1/43.8
C812	4030022260	S.CER	GRM033R60J105MEA2D	B	21.5/47.5
C813	4030023110	S.CER	0402B152K500CT	B	22.5/29.1
C814	4030022260	S.CER	GRM033R60J105MEA2D	B	50.9/31.1
C815	4030022160	S.CER	GRM033B31A104KE84D	B	33.2/32.9
C817	4030022260	S.CER	GRM033R60J105MEA2D	T	18.4/33.2
C818	4030022260	S.CER	GRM033R60J105MEA2D	T	17.8/31.3
C819	4030022260	S.CER	GRM033R60J105MEA2D	T	17.8/33.2
C820	4030022160	S.CER	GRM033B31A104KE84D	B	16.8/44.3
J700	6450000131	CON	HSJ1102-018540		
J701	6450002530	CON	HSJ4456-010320		
DS400	5030004550	LCD	GP11538A6		

M.=Mounted side (T: Mounted on the Top side, B: Mounted on the Bottom side)
H/V LOCATION=See the BOARD LAYOUTS for details.

The underlined parts have been updated from the previous version of the addendum, or from the original page.

[MAIN-A UNIT] (for IC-G86)

REF NO.	PART NO.	DESCRIPTION		M.	H/V LOCATION
DS401	5040003500	S.LED	HT-191 UYG-K828	T	52.8/4.6
DS402	5040003500	S.LED	HT-191 UYG-K828	T	48.3/4.6
MC700	7700003280	S.MIC	SPU0410HR5H-PB-7	T	36.6/6.6
S400	2250001090	ENC	ED08902OFK150S070C-2015		
S401	2260003490	S.SWI	TAFG-12W-QR	B	17.4/1.9
EP1	8930101610	LCD	SRCN-4066-SP-N-W (SHJ)		
EP3	6910018460	S.BEA	MMZ1005Y102C-T	B	33.3/9.5
EP4	6910014690	S.BEA	MPZ1608S221A-T	B	24.5/20.0
EP400	6910021240	S.BEA	MMZ1005A152ET	B	78.9/38.3
EP700	6910018460	S.BEA	MMZ1005Y102C-T	B	24.0/45.6
EP701	6910018460	S.BEA	MMZ1005Y102C-T	B	18.7/45.5
EP702	6910019900	S.BEA	MPZ1608S601AT	B	26.6/42.1
EP703	6910016330	S.BEA	MMZ1005S 601CT-S	B	38.3/42.0
EP704	6910018460	S.BEA	MMZ1005Y102C-T	B	37.0/45.7

Eqv.= This component is equivalent to the REF No. component listed above, and may be substituted on parts orders and repairs.

M.=Mounted side (T: Mounted on the Top side, B: Mounted on the Bottom side)
H/V LOCATION=See the BOARD LAYOUTS for details.

SECTION 6 MECHANICAL PARTS

The underlined parts have been updated from the previous version of the addendum, or from the original page.

[CHASSIS UNIT]

REF NO.	PART NO.	DESCRIPTION		QTY.
J1	6510032950	BNC-R4066		1
MP1	8010021713	3285 CHASSIS-3		1
MP2	8930079900	3285 TERMINAL HOLDER		1
MP5	8930080400	3285 MINUS TERMINAL		1
MP9	8830003390	VR NUT (AB)		1
MP10	8610014170	KNOB N-391		1
MP11	8930080280	3254 TOP SEAL		1
MP12	8810009511	PHBT M2 × 4 NI-ZC3 (3.6-4.0)		9
MP13	8810009511	PHBT M2 × 4 NI-ZC3 (3.6-4.0)		1
MP15	8810008761	PHBT M2 × 8 NI-ZC3		2
MP16	8210034560	4066 FRONT PANEL ASSEMBLY	[#11]	1
	8210034560	4066 FRONT PANEL ASSEMBLY	[#12]	1
	8210034560	4066 FRONT PANEL ASSEMBLY	[#13]	1
	8210034550	4066 FRONT PANEL ASSEMBLY (A)	[#31]	1
	8210034520	4066 FRONT PANEL (B) ASSEMBLY	[#41]	1
MP21	8930101250	4066 SIDE SEAL (KOB)		1
MP22	8930101260	4066 SIDE PLATE		1
MP24	8930101210	THERMAL SHEET DT TC-200CAT-20 (8X12)		1
MP26	8830004670	STEP NUT (Q)		1
MP28	8850003421	SEALING WASHER (AA)-1 (TOT)		1
MP30	8930100760	3620 MIC RUBBER (KOB)		1
MP33	8930080100	3285 PLUS TERMINAL		1

[SUPPLIED ACCESSORIES]

REF NO.	PARTS NO.	DESCRIPTION		QTY.
EP1	–	FA-B57V†	[#11]	1
	–	FA-B45V†	[#12]	1
	–	FA-B57V†	[#13]	1
	–	FA-B45V†	[#31]	1
	–	FA-B57V†	[#41]	1
EP2	–	BP-298†	[#11]	1
	–	BP-298†	[#12]	1
	–	BP-264†	[#13]	1
	–	BP-298†	[#31]	1
	–	BP-298†	[#41]	1
EP3	–	BC-240†	[#11]	1
	–	BC-240†	[#12]	1
	–	BC-192†	[#13]	1
	–	BC-240†	[#31]	1
	–	BC-240†	[#41]	1
EP4	–	BC-242†		1
MP1	–	MB-124†		1
MP2	8210025841	3285 JACK PANEL-1	[#11]	1
	8210025841	3285 JACK PANEL-1	[#12]	1
	8210025841	3285 JACK PANEL-1	[#13]	1
	8210025841	3285 JACK PANEL-1	[#31]	1
	8210026621	3285 JACK PANEL (B)-1 G	[#41]	1
MP3	8810004861	PH M2 × 6 ZK3		2

† Sold as an option.

[MAIN UNIT] (for IC-V86 and IC-V86-T)

REF NO.	PART NO.	DESCRIPTION	QTY.
DS400	5030004550	GP11538A6	1
MC700*	7700003280	SPU0410HR5H-PB-7	1
S400	2250001090	ED08902OFK150S070C-2015	1
S401*	2260003490	TAFG-12W-QR	1
EP1	8930101610	SRCN-4066-SP-N-W (SHJ)	1
MP1*	8510022740	4066 VCO CASE	1
MP4*	8930101082	3620 SP SPRING-2	1
MP5*	8930100370	4066 ANT SPRING	1
MP6*	8410003170	4066 PA HEATSINK	1
MP7	8210034210	4066 REFLECTOR	1
MP8	8930101200	4066 LCD HOLDER	1
MP9	8930080260	3254 WHITE SHEET	1

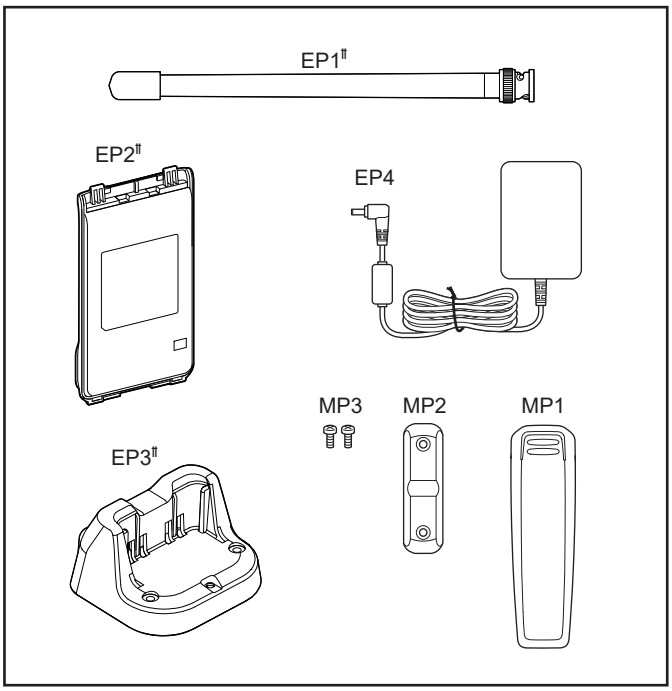

†† The shape will differ depending on the transceiver version.

[MAIN-A UNIT] (for IC-G86)

REF NO.	PART NO.	DESCRIPTION	QTY.
DS400	5030004550	GP11538A6	1
MC700*	7700003280	SPU0410HR5H-PB-7	1
S400	2250001090	ED08902OFK150S070C-2015	1
S401*	2260003490	TAFG-12W-QR	1
EP1	8930101610	SRCN-4066-SP-N-W (SHJ)	1
MP1*	8510022740	4066 VCO CASE	1
MP4*	8930101082	3620 SP SPRING-2	1
MP5*	8930100370	4066 ANT SPRING	1
MP6*	8410003170	4066 PA HEATSINK	1
MP7	8210034210	4066 REFLECTOR	1
MP8	8930101200	4066 LCD HOLDER	1
MP9	8930080260	3254 WHITE SHEET	1
MP100*	6910014760	OG-503040	1

*: Refer to "BOARD LAYOUTS" for the location.

Screw abbreviations A, B0, BT: Self-tapping PH: Pan head BS: Brass NI: Nickel ZU: Zinc SUS: Stainless

The underlined parts have been updated from the previous version of the addendum, or from the original page.

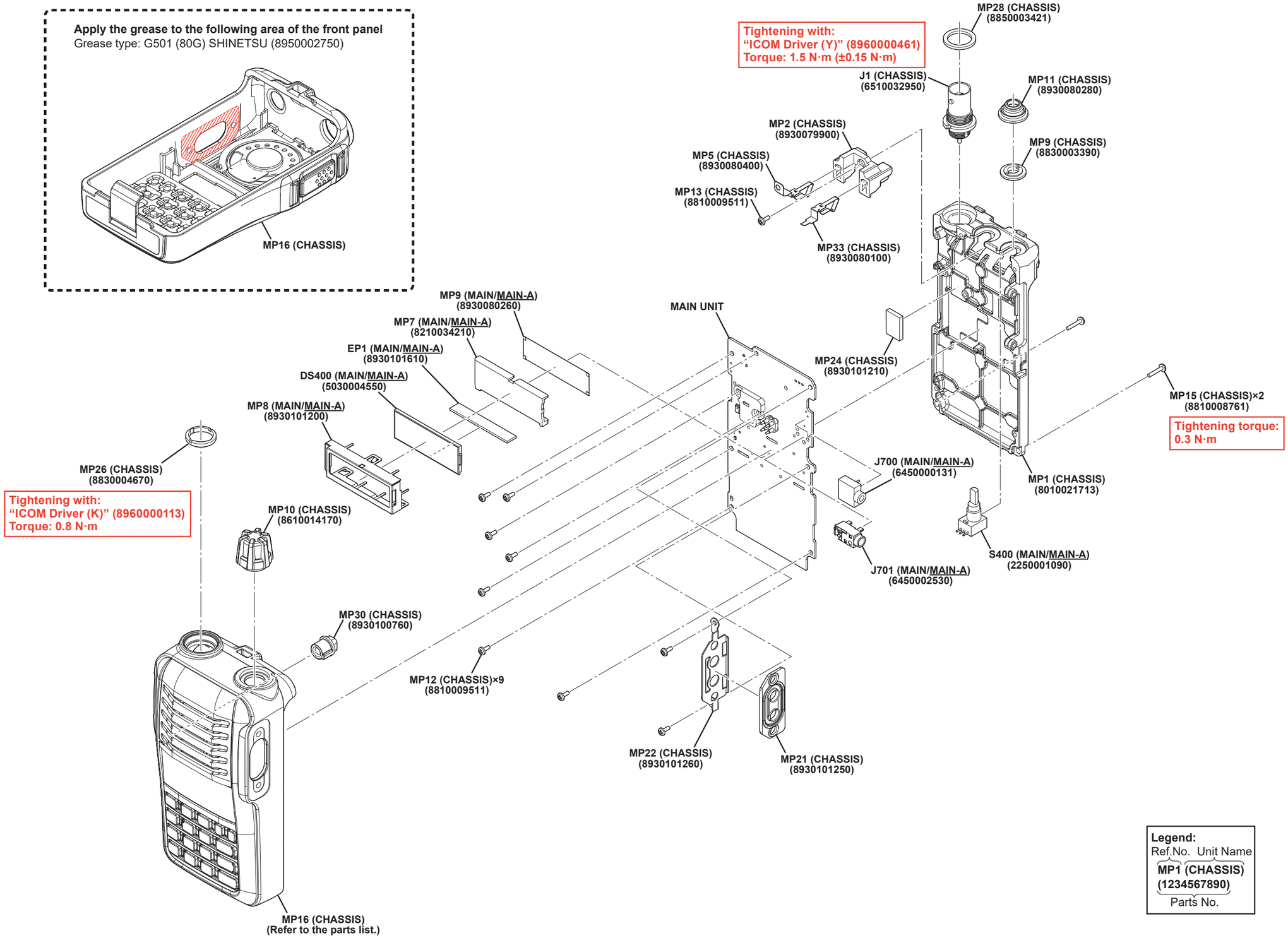

SECTION 7 BOARD LAYOUTS

The underlined parts have been updated from the previous version of the addendum, or from the original page.

• MAIN UNIT (for IC-V86 and IC-V86-T/B-8938D: TOP VIEW)

The serial numbers of transceivers that use the PCB (B-8938D).

Model Name	Version Number	Serial Numbers
IC-V86	#11	11001501 ~ 11005000
IC-V86	#12	12001301 ~ 12002300
IC-V86	#13	13001301 ~ 13002300
IC-V86-T	#31	31001201 ~ 31001700

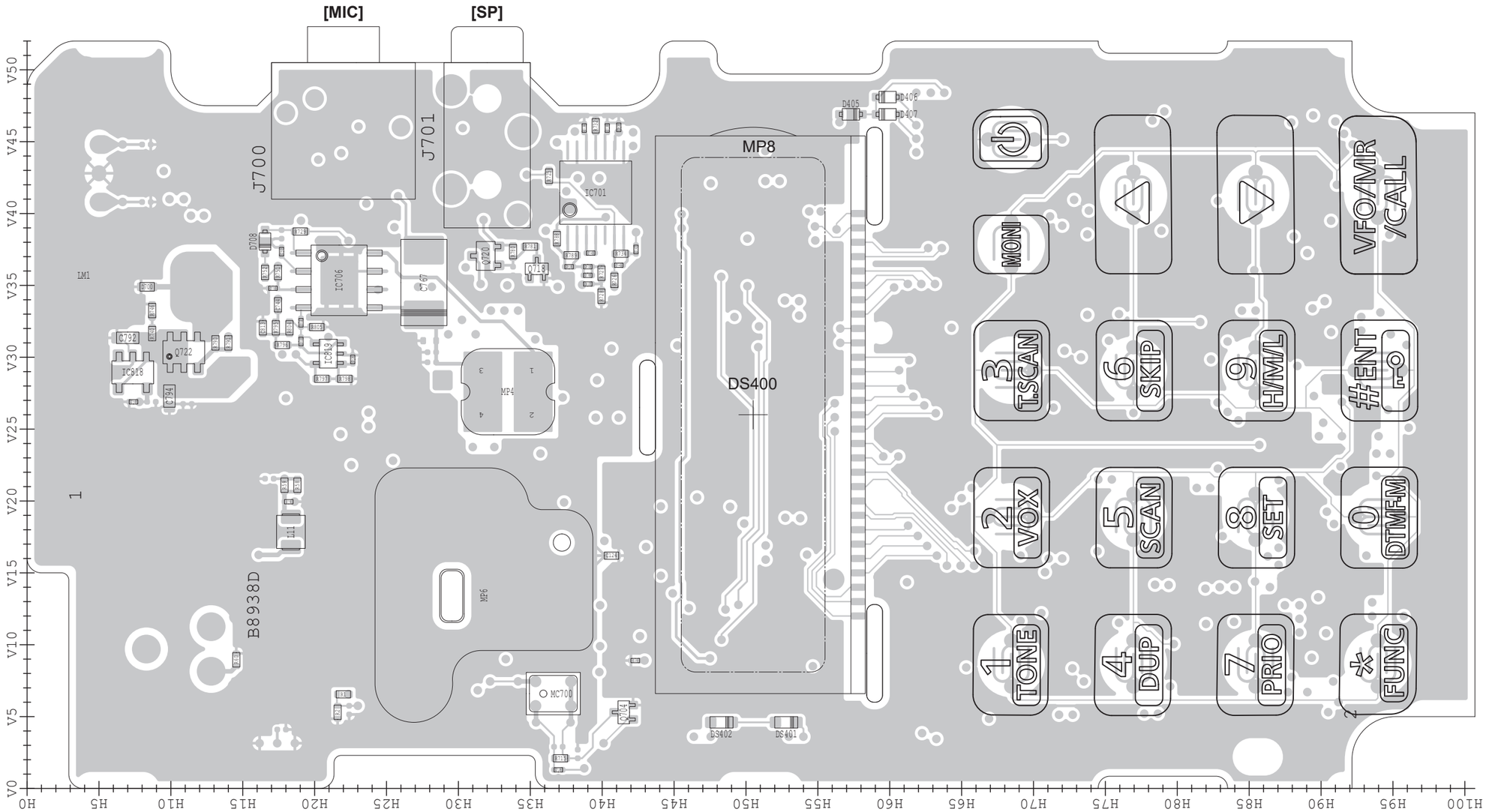

See the PARTS LIST H/V location on the PARTS LIST for location details.

The underlined parts have been updated from the previous version of the addendum, or from the original page.

• **MAIN UNIT (for IC-V86 and IC-V86-T/B-8938D: BOTTOM VIEW)**

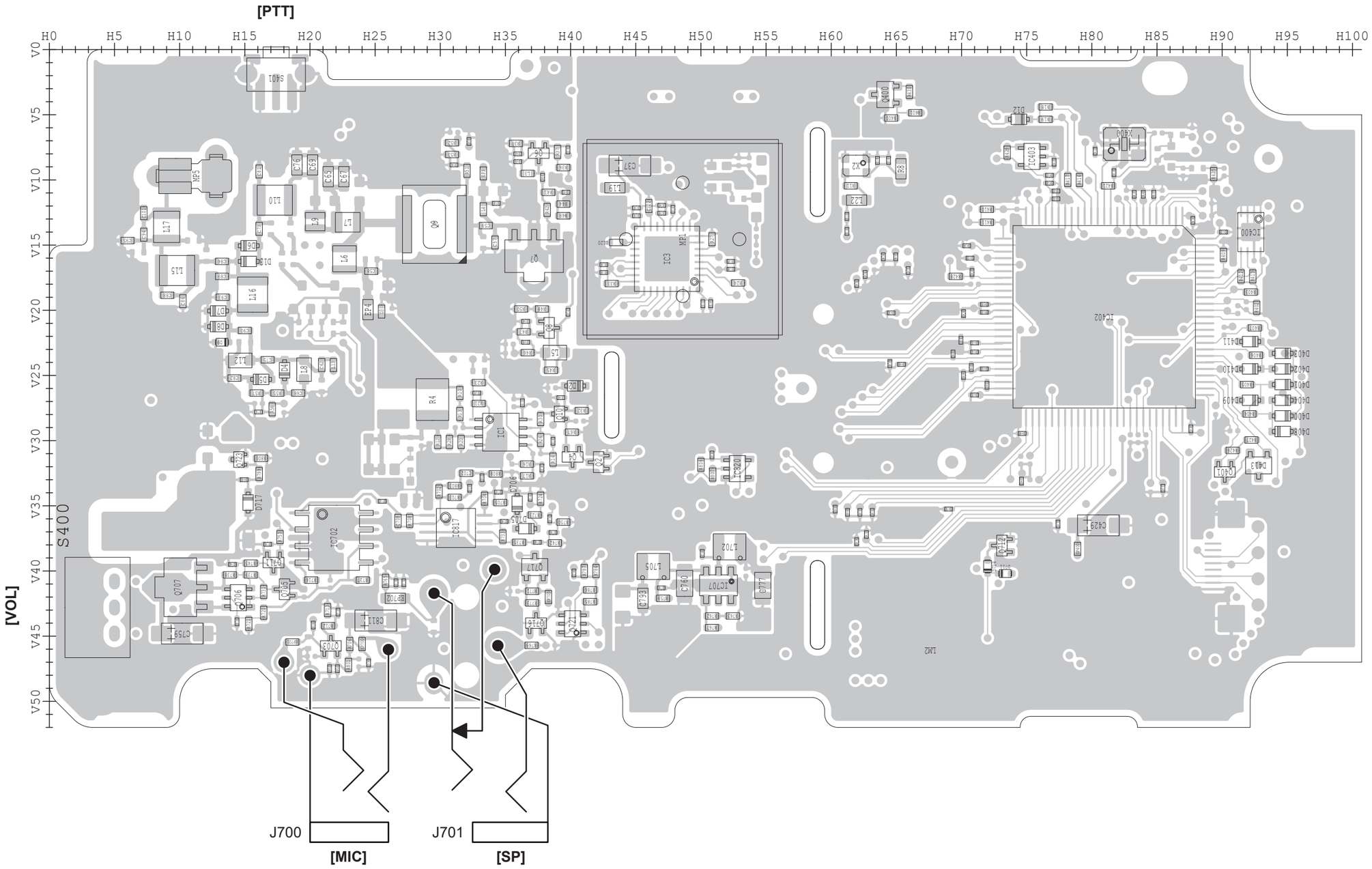

See the PARTS LIST H/V location on the PARTS LIST for location details.

The underlined parts have been updated from the previous version of the addendum, or from the original page.

• MAIN UNIT (for IC-V86 and IC-V86-T/B-8938E: TOP VIEW)

The serial numbers of transceivers that use the PCB (B-8938E).

Model Name	Version Number	Serial Numbers
IC-V86	#11	11005001 ~ 11008200
IC-V86	#12	Not used
IC-V86	#13	13002301 ~ 13003000
IC-V86-T	#31	31001701 ~ 31001800

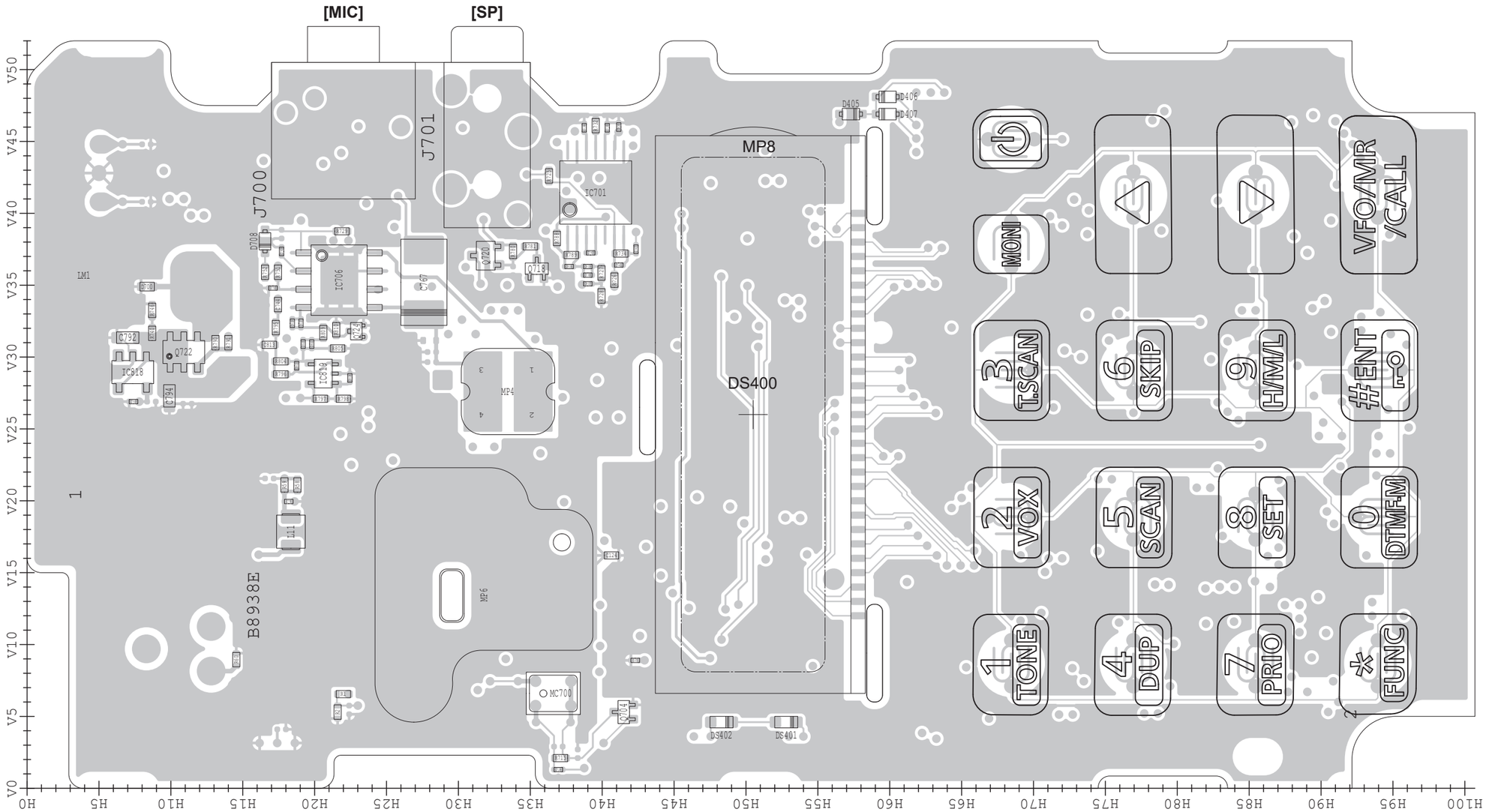

See the PARTS LIST H/V location on the PARTS LIST for location details.

The underlined parts have been updated from the previous version of the addendum, or from the original page.

• **MAIN UNIT (for IC-V86 and IC-V86-T/B-8938E: BOTTOM VIEW)**

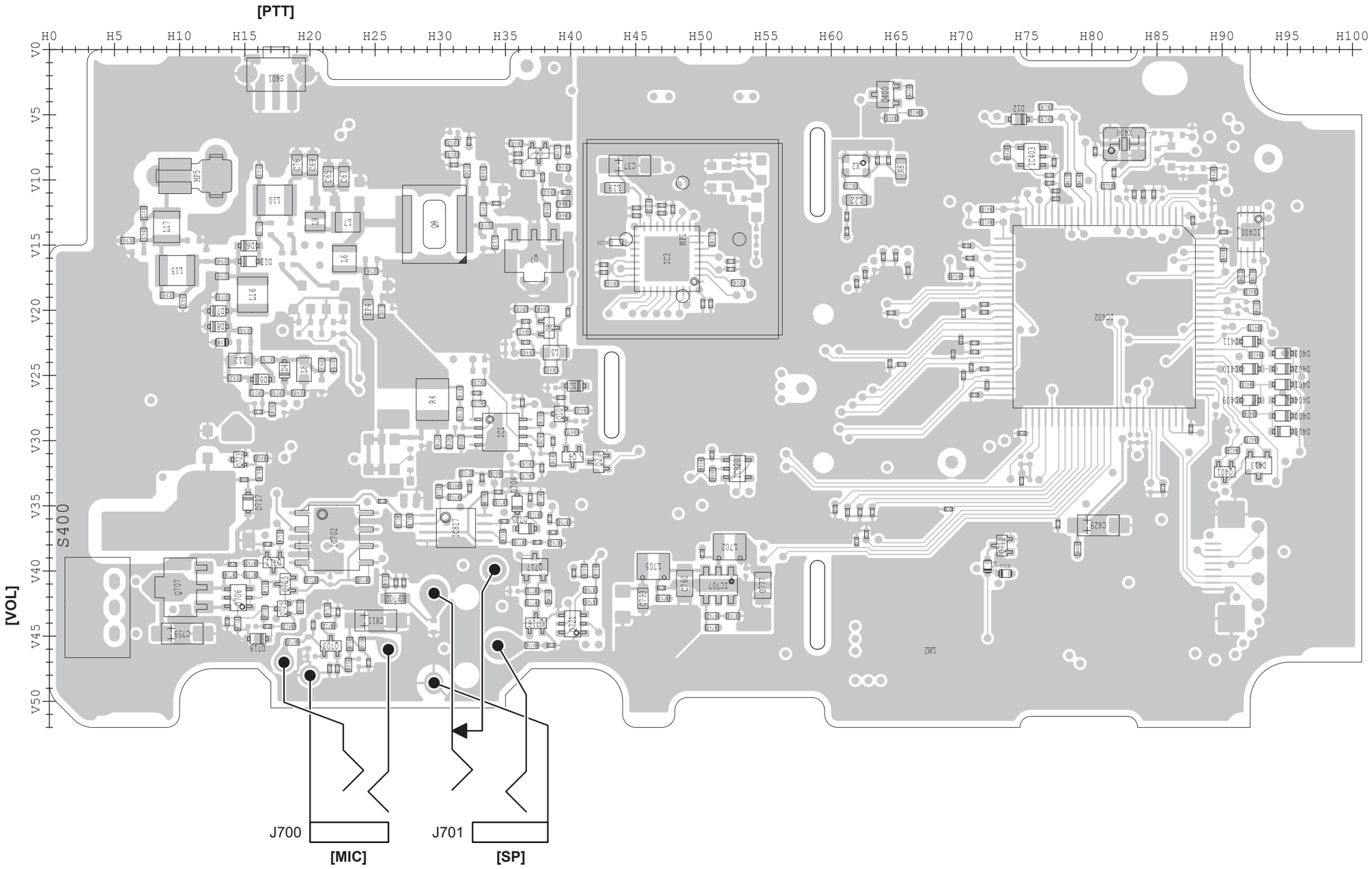

See the PARTS LIST H/V location on the PARTS LIST for location details.

The underlined parts have been updated from the previous version of the addendum, or from the original page.

• MAIN UNIT (for IC-V86 and IC-V86-T/B-9151: TOP VIEW)

The serial numbers of transceivers that use the PCB (B-9151).

Model Name	Version Number	Serial Numbers
IC-V86	#11	11008201 ~ 11014000
IC-V86	#12	12002301 ~ 12002400
IC-V86	#13	Not used
IC-V86-T	#31	31001801 ~ 31002000

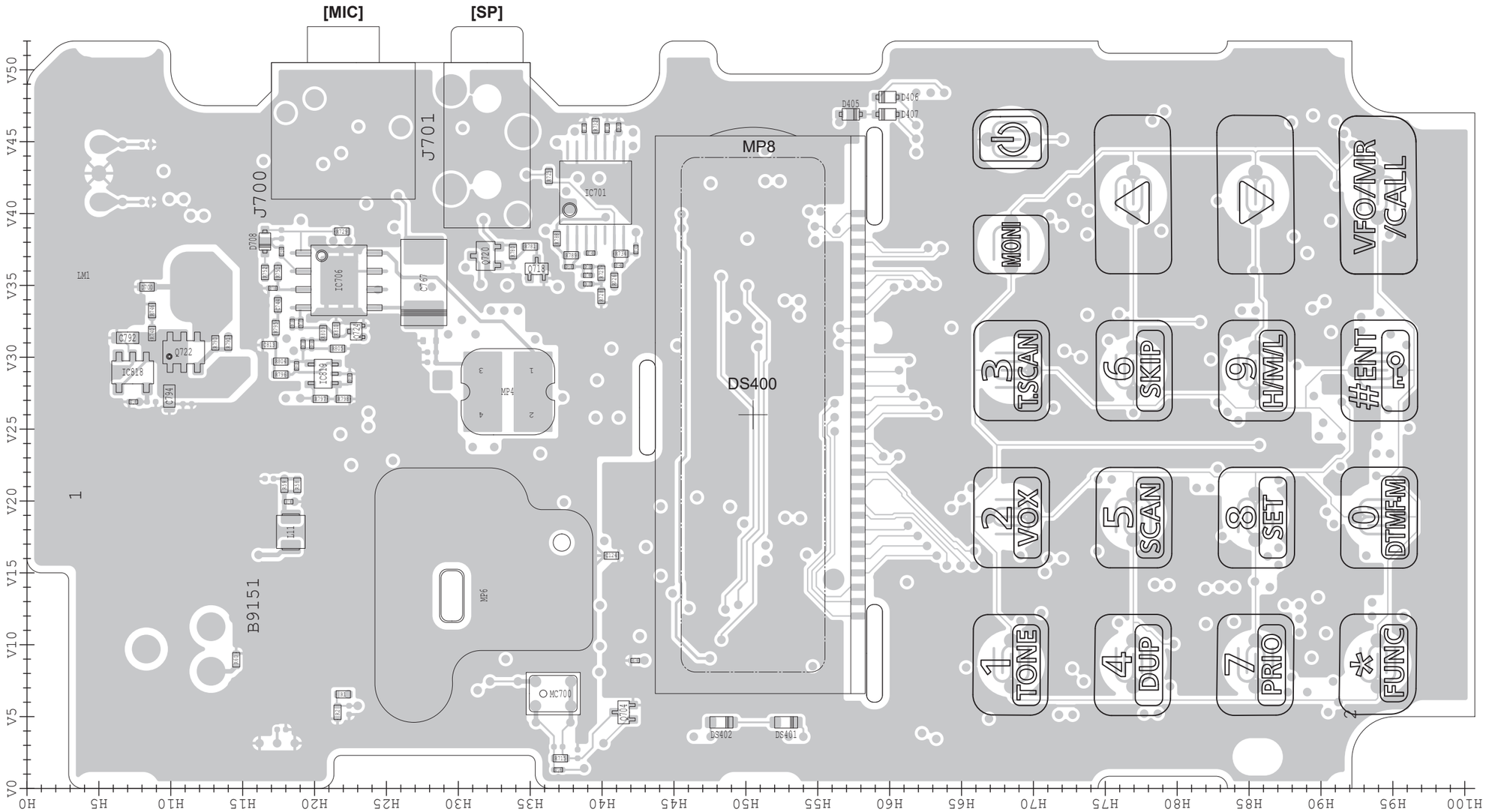

See the PARTS LIST H/V location on the PARTS LIST for location details.

The underlined parts have been updated from the previous version of the addendum, or from the original page.

• MAIN UNIT (for IC-V86 and IC-V86-T/B-9151: BOTTOM VIEW)

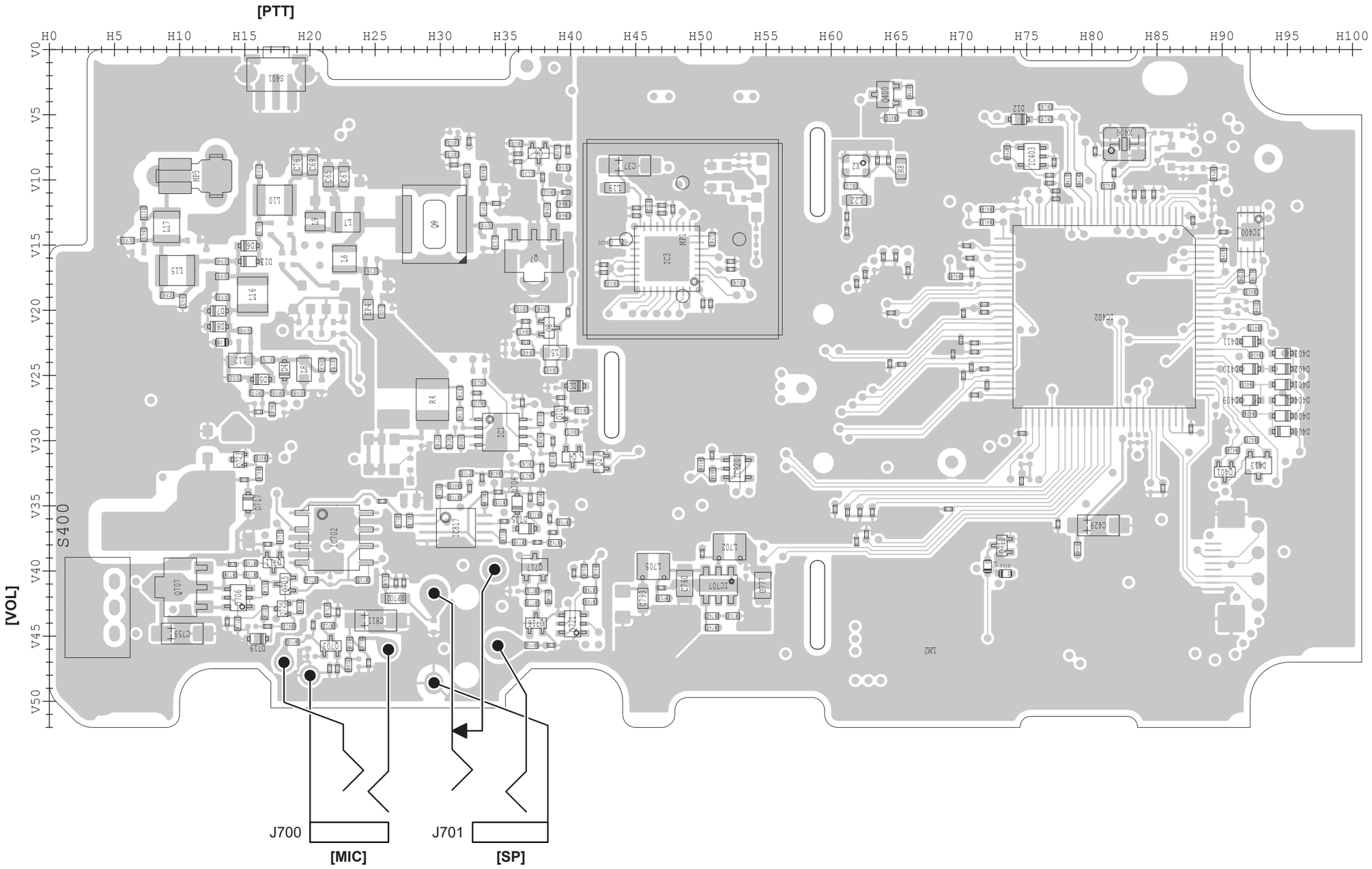

See the PARTS LIST H/V location on the PARTS LIST for location details.

The underlined parts have been updated from the previous version of the addendum, or from the original page.

• MAIN UNIT (for IC-V86 and IC-V86-T/B-9151A: TOP VIEW)

The serial numbers of transceivers that use the PCB (B-9151A).

Model Name	Version Number	Serial Numbers
IC-V86	#11	11014001 and above
IC-V86	#12	12002401 and above
IC-V86	#13	13003001 and above
IC-V86-T	#31	31002001 and above

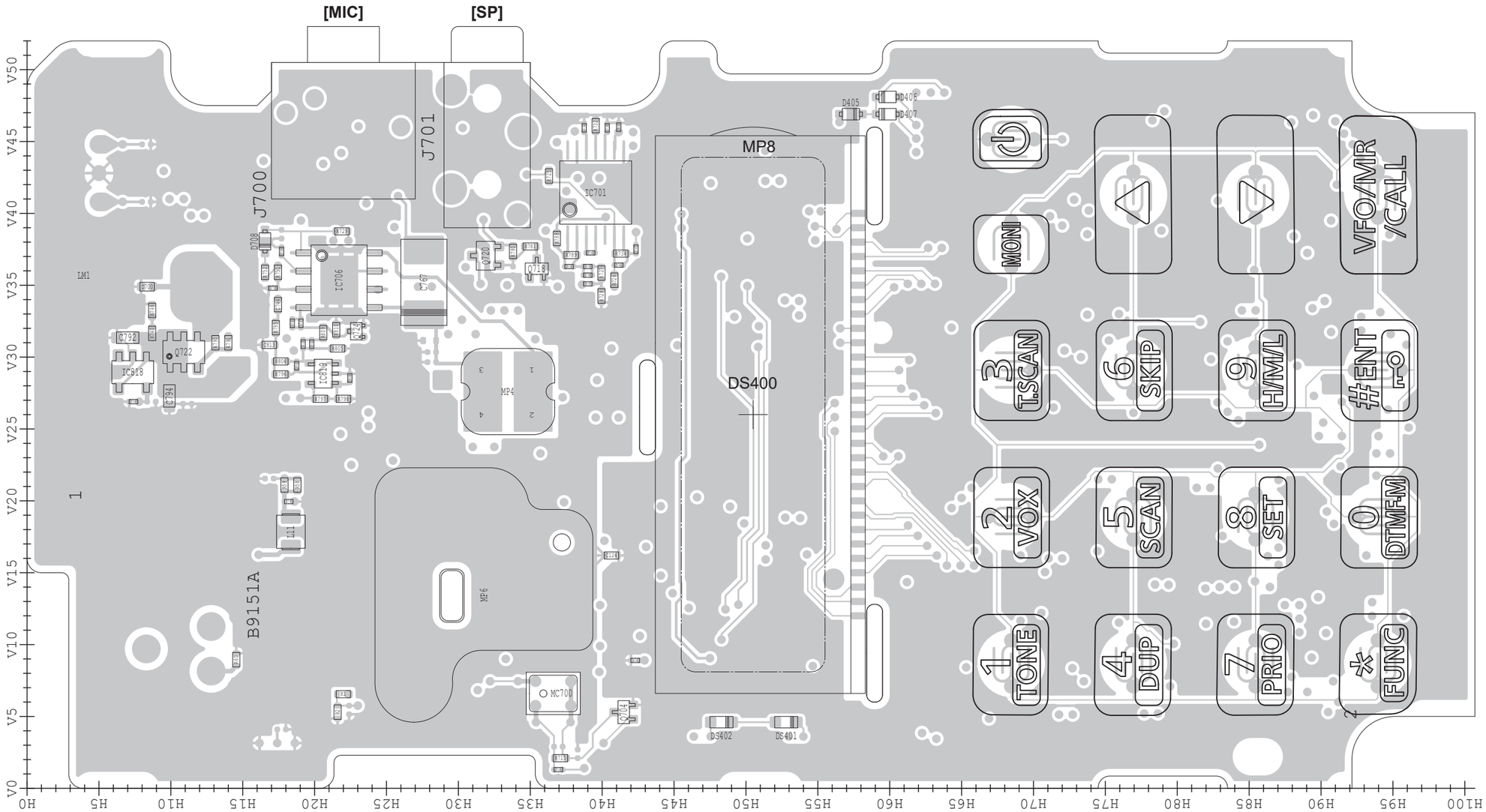

See the PARTS LIST H/V location on the PARTS LIST for location details.

The underlined parts have been updated from the previous version of the addendum, or from the original page.

• MAIN UNIT (for IC-V86 and IC-V86-T/B-9151A: BOTTOM VIEW)

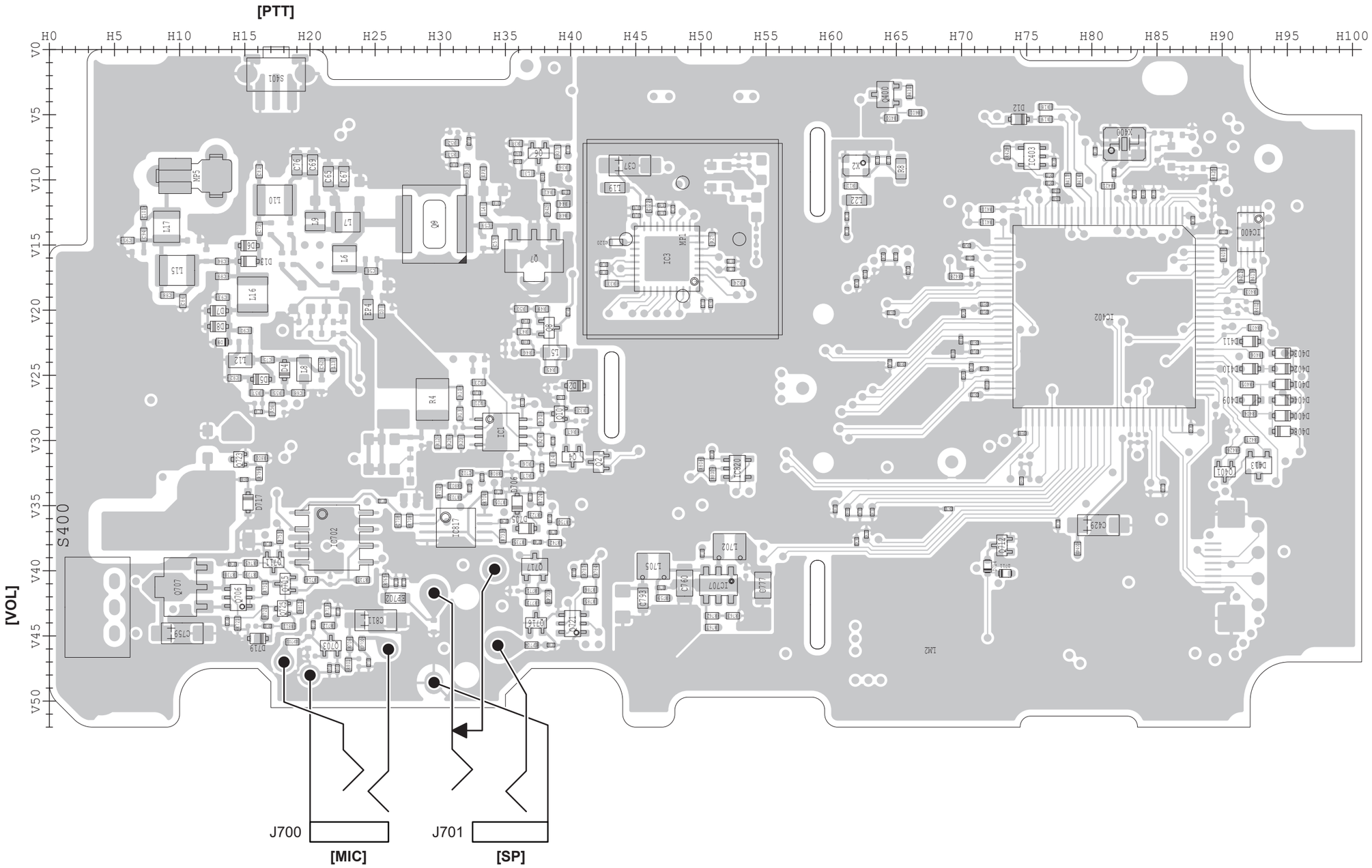

See the PARTS LIST H/V location on the PARTS LIST for location details.

The underlined parts have been updated from the previous version of the addendum, or from the original page.

• **MAIN-A UNIT (for IC-G86/B-9067B: TOP VIEW)**

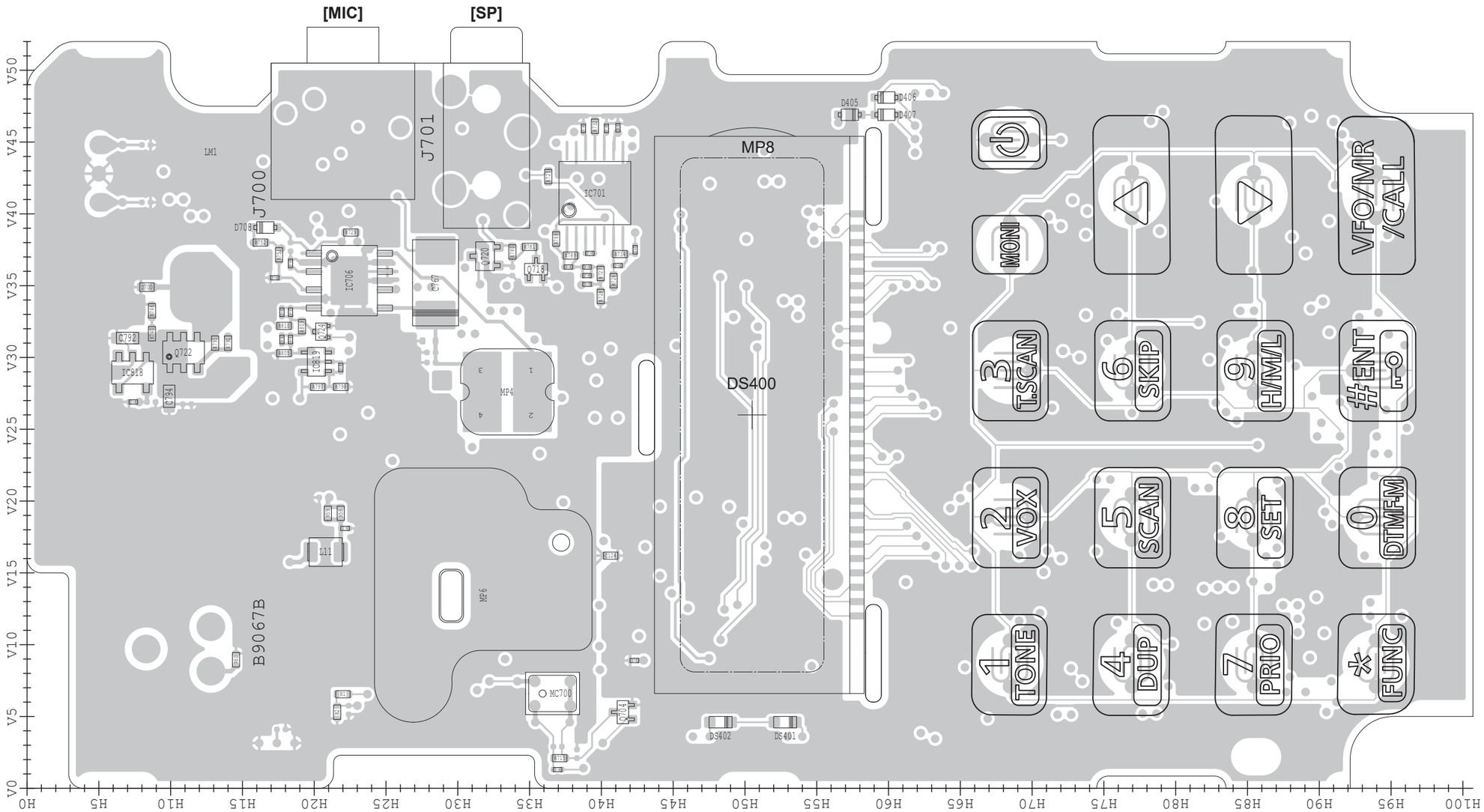

See the PARTS LIST H/V location on the PARTS LIST for location details.

The underlined parts have been updated from the previous version of the addendum, or from the original page.

• **MAIN-A UNIT (for IC-G86/B-9067B: BOTTOM VIEW)**

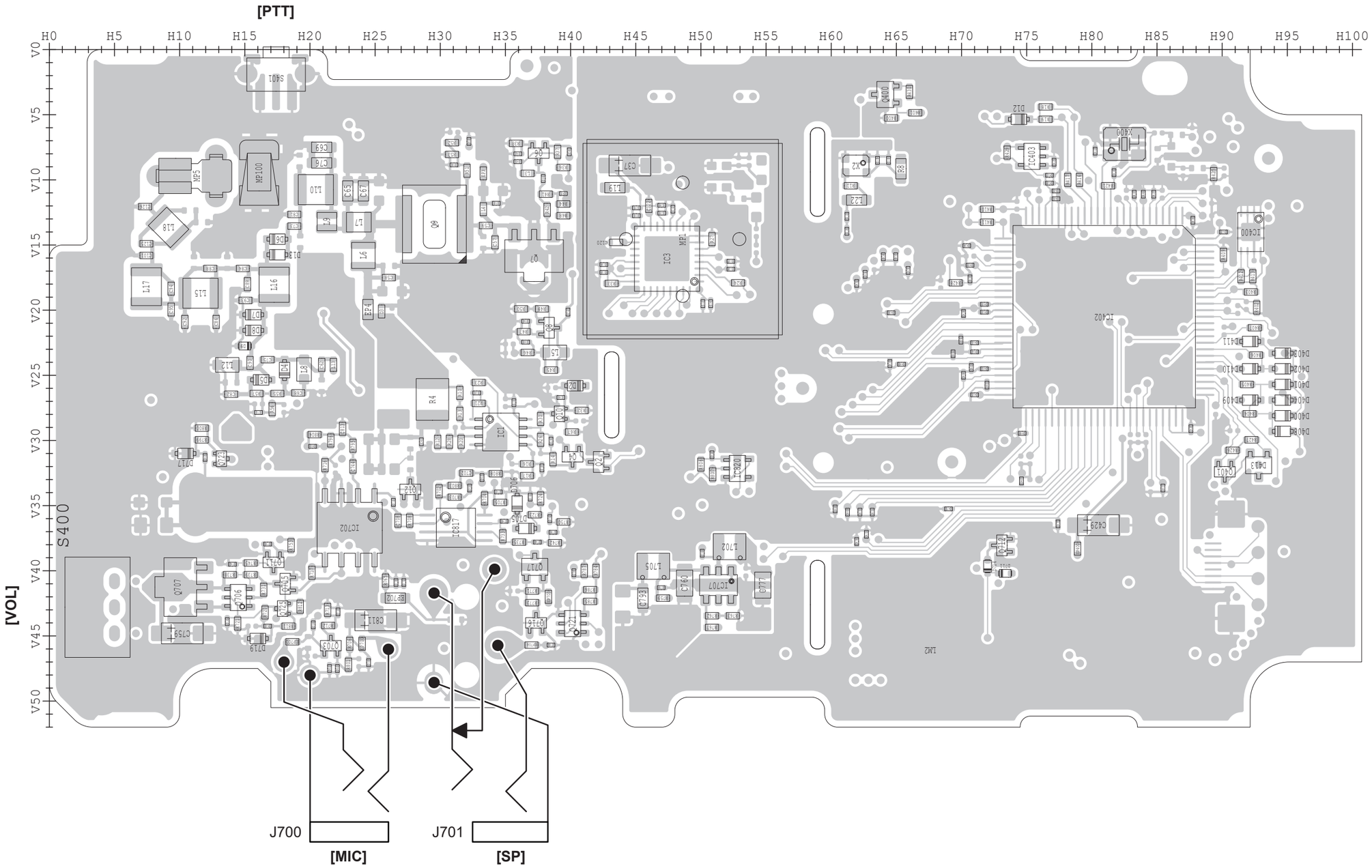

See the PARTS LIST H/V location on the PARTS LIST for location details.

SECTION 8 VOLTAGE DIAGRAM

The underlined parts have been updated from the previous version of the addendum, or from the original page.

• MAIN UNIT (for IC-V86 and IC-V86-T) (1/3)

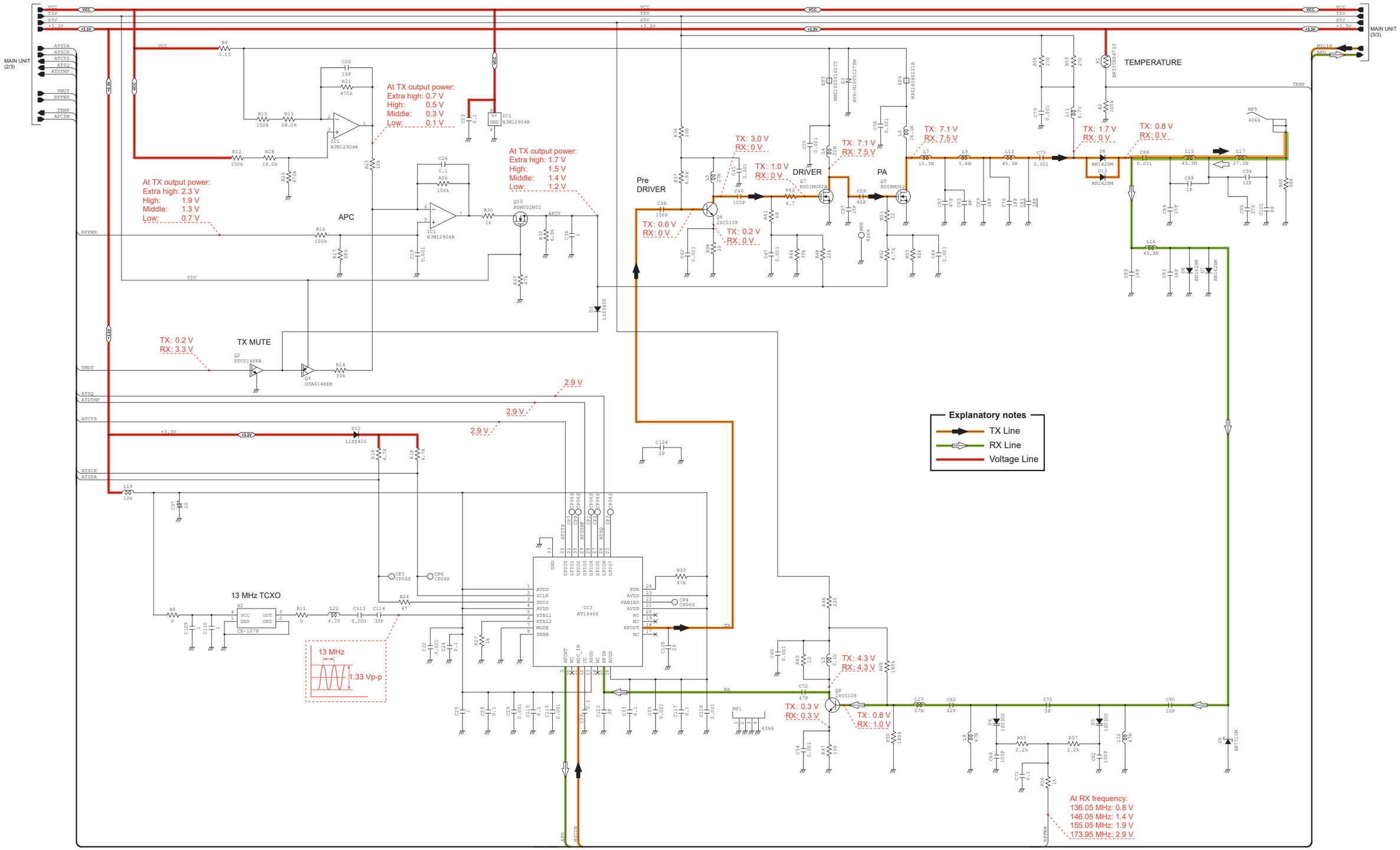

The underlined parts have been updated from the previous version of the addendum, or from the original page.

• **MAIN UNIT (for IC-V86 and IC-V86-T) (2/3)**

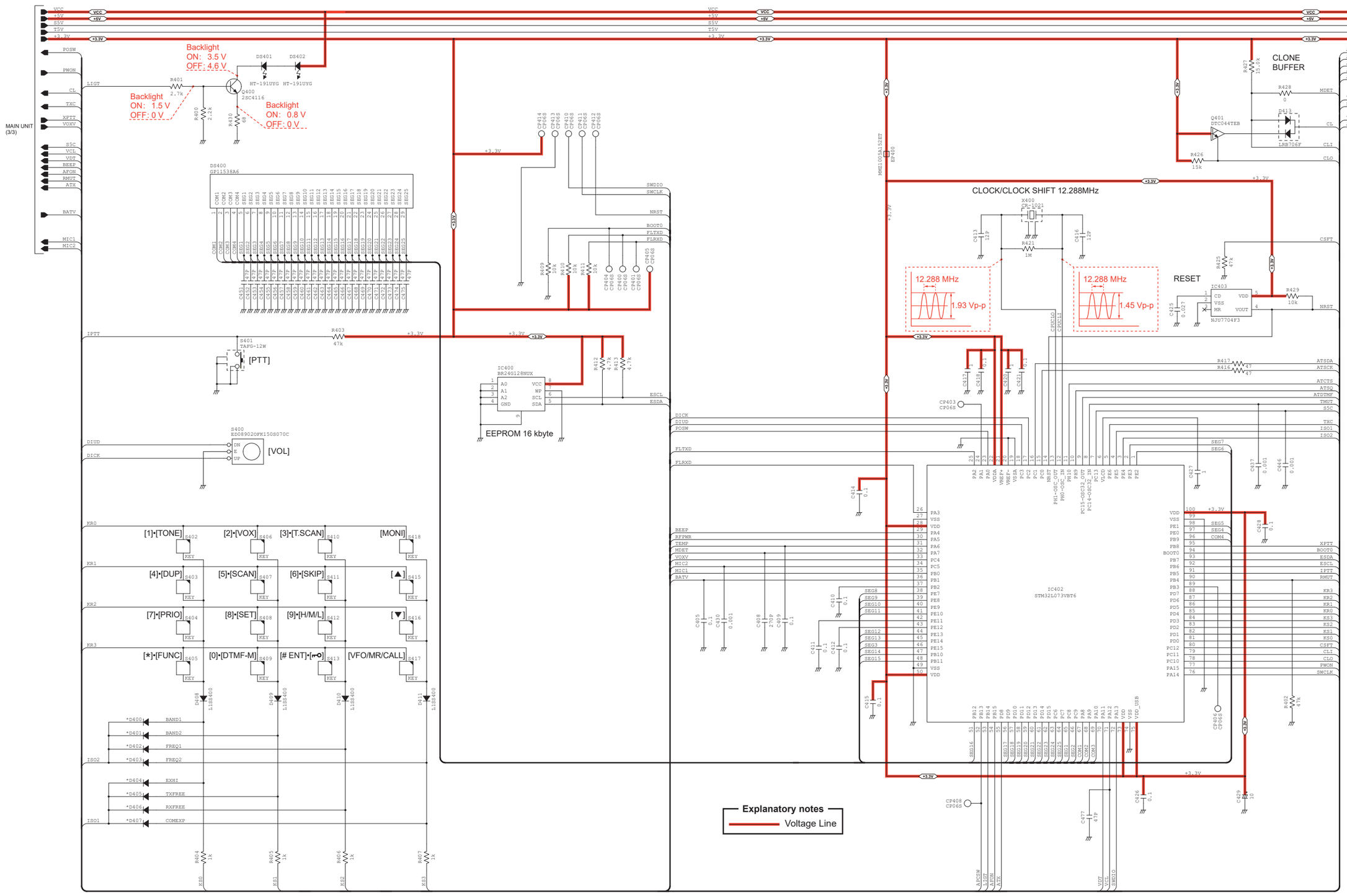

The underlined parts have been updated from the previous version of the addendum, or from the original page.

• MAIN UNIT (for IC-V86 and IC-V86-T) (3/3)

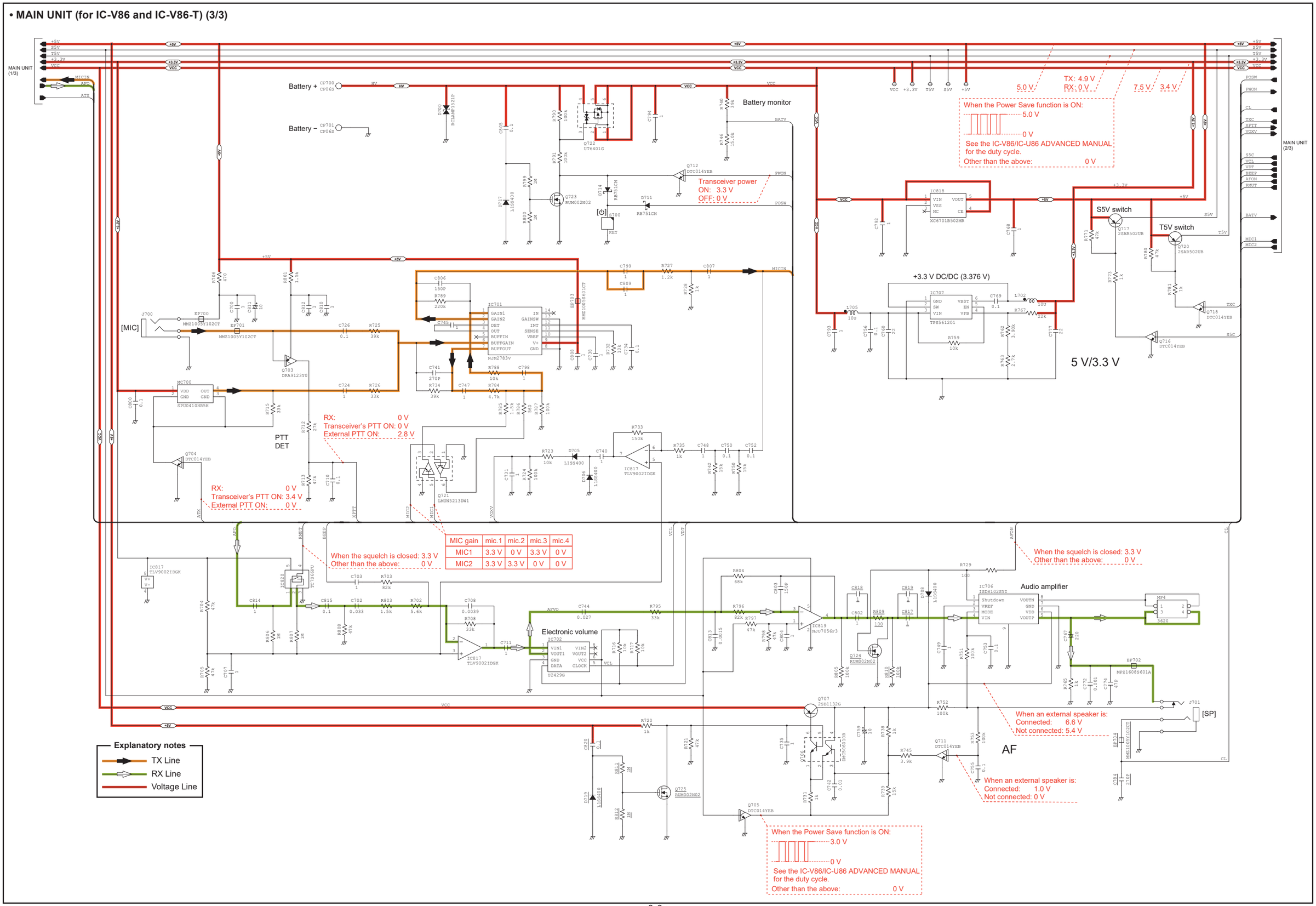

MIC gain	mic.1	mic.2	mic.3	mic.4
MIC1	3.3 V	0 V	3.3 V	0 V
MIC2	3.3 V	3.3 V	0 V	0 V

The underlined parts have been updated from the previous version of the addendum, or from the original page.

• MAIN-A UNIT (for IC-G86) (1/3)

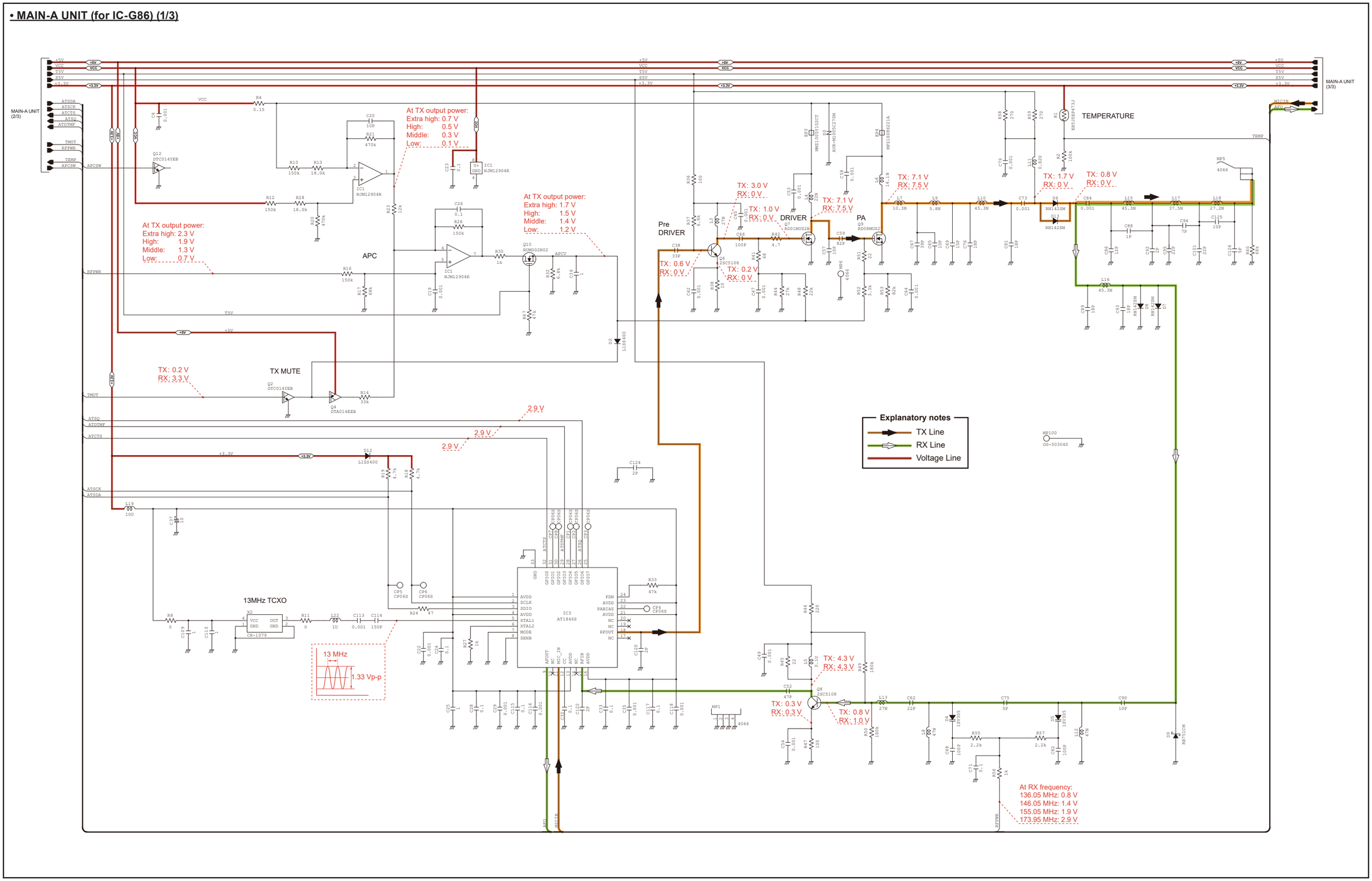

The underlined parts have been updated from the previous version of the addendum, or from the original page.

• MAIN-A UNIT (for IC-G86) (2/3)

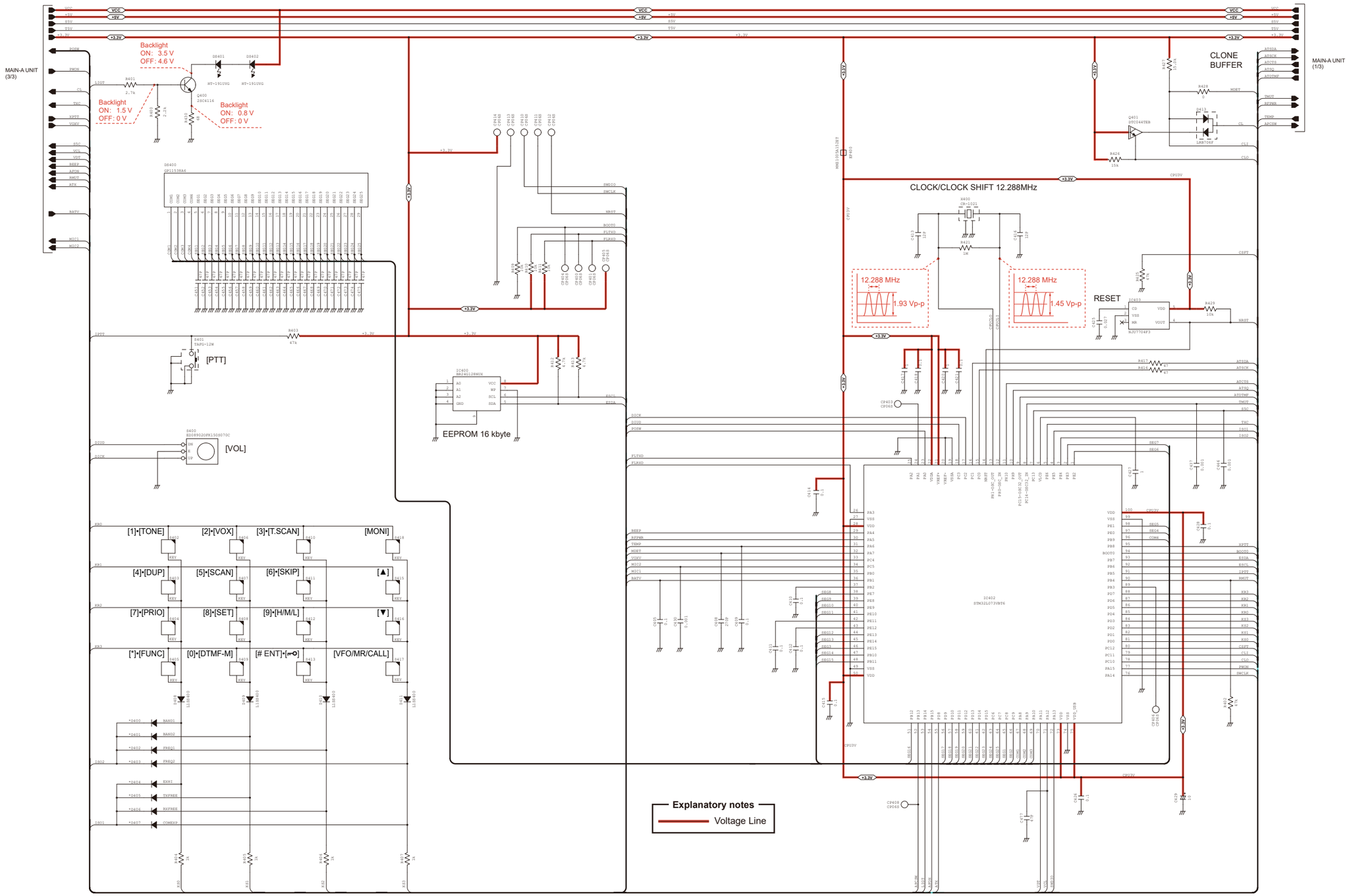

The underlined parts have been updated from the previous version of the addendum, or from the original page.

• MAIN-A UNIT (for IC-G86) (3/3)

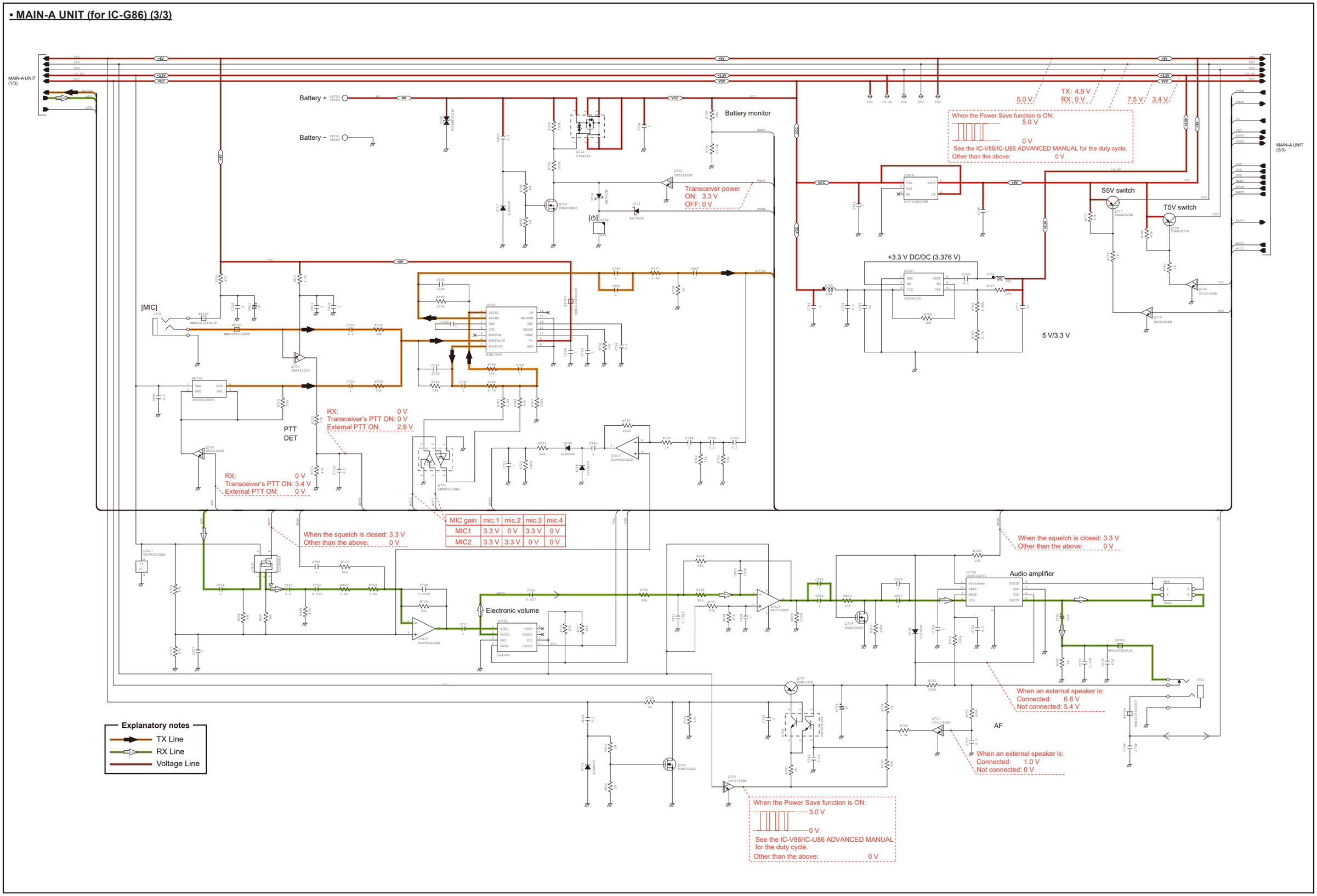

MIC gain	mic.1	mic.2	mic.3	mic.4
MIC1	3.3 V	0 V	3.3 V	0 V
MIC2	3.3 V	3.3 V	0 V	0 V

ICOM

SERVICE MANUAL

VHF TRANSCEIVERS

IC-V86
IC-V86-T

S-15514XZ-C1
April 2019

Icom Inc.

INTRODUCTION

This service manual describes the latest technical information for the IC-V86/IC-V86-T VHF TRANSCEIVERS at the time of publication.

MODEL	VERSION	VERSION NUMBER	TX POWER
IC-V86	EXP-01	#11	7.0 W
	USA-01	#12	
	EXP-03	#13	
IC-V86-T	THA-01	#31	5.0 W

To upgrade quality, any electrical or mechanical parts and internal circuits are subject to change without notice or obligation.

IC-V86 IC-V86-T

SERVICE CAUTION

NEVER connect the transceiver to an AC outlet or to a DC power supply that outputs more than the specified voltage. This will ruin the transceiver.

DO NOT expose the transceiver to rain, snow or liquids.

DO NOT reverse the polarity of the DC power cable when directly applying power to the transceiver.

DO NOT apply an RF signal of more than 20 dBm (100 mW) to the antenna connector. This could damage the transceiver's front-end.

ORDERING PARTS

Be sure to include the following four points when ordering replacement parts:

1. 10-digit Icom part number
2. Component name
3. Equipment model name and unit name
4. Quantity required

<ORDER EXAMPLE>

1110010140	TLV9002IDGKR	IC-V86	MAIN UNIT	5 pieces
8930101260	4066 SIDE PLATE	IC-V86	CHASSIS	1 piece

REPAIR NOTES

1. Make sure that the problem is internal before disassembling the transceiver.
2. **DO NOT** open the transceiver until the transceiver is disconnected from its power source.
3. **DO NOT** short any circuits or electronic parts.
4. **DO NOT** keep power ON for a long time when the transceiver is defective.
5. **NEVER** directly transmit power into any test equipment such as Standard Signal Generator or a Sweep Generator, otherwise the RF power may damage them.
6. **ALWAYS** connect a 30 dB to 40 dB attenuator between the transceiver and such test equipment.
7. **READ** the instructions of the test equipment thoroughly before connecting it to the transceiver.

Icom, Icom Inc. and the Icom logo are registered trademarks of Icom Incorporated (Japan) in Japan, the United States, the United Kingdom, Germany, France, Spain, Russia, Australia, New Zealand, and/or other countries.

TABLE OF CONTENTS

SECTION 1 SPECIFICATIONS

SECTION 2 INSIDE VIEWS

SECTION 3 DISASSEMBLY INSTRUCTIONS

SECTION 4 ADJUSTMENT PROCEDURE

4-1 PREPARATION 4-1
4-2 TRANSMIT ADJUSTMENTS 4-4
4-3 RECEIVE ADJUSTMENTS 4-7

SECTION 5 PARTS LIST

SECTION 6 MECHANICAL PARTS

SECTION 7 BOARD LAYOUTS

SECTION 8 BLOCK DIAGRAM

SECTION 9 VOLTAGE DIAGRAM

SECTION 1 SPECIFICATIONS

				[USA-01]	[EXP-01], [EXP-03]	[THA-01]
GENERAL	**Frequency range**		RX	136~174 MHz		144~147 MHz
			TX	144~148 MHz	136~174 MHz	144~147 MHz
	Operating mode			F2D, F3E		
	Number of memory channels			207 channels (200 memory channels, 1 call channel, and 6 scan edge channels)		
	Scan types			Full, Program, Priority, Memory channel, Skip, and Tone		
	Selectable tuning setps			5, 10, 12.5, 15, 20, 25, 30, and 50 kHz		
	Usable temperature range			−20°C~+60°C (−4°F~+140°F)		
	Frequency stability			±2.5 ppm (−20°C~+60°C)		
	Power supply			Specified Icom's battery packs and case only 7.5 V DC (negative ground)		
	Current drain (at 7.5 V DC)	RX	Internal speaker	450 mA typical (Maximum audio)		
			External speaker	200 mA typical (Maximum audio)		
		TX	Extra high power	1600 mA typical		–
			High power	1400 mA typical		
			Middle power	1000 mA typical		
			Low power	500 mA typical		
	Antenna connector			BNC (50 Ω)		
	Dimensions (projections not included)		With BP-298	58.6 (W)×112 (H)×30.5 (D) mm (2.3 (W)×4.4 (H)×1.2 (D) inches)		
			With BP-264	58.6 (W)×112 (H)×26.0 (D) mm (2.3 (W)×4.4 (H)×1.0 (D) inches)		
	Weight (approximate)			300 g (10.6 oz, with BP-298 and FA-B57V) 360 g (12.7 oz, with BP-264 and FA-B57V)		
TRANSMITTER	**Output power** (at 7.5 V DC)		Extra high power	7.0 W	7.0 W*1	–
			High power	5.5 W		5.0 W
			Middle power	2.5 W		
			Low power	0.5 W		
	Modulation system			Frequency shift keying modulation		
	Maximum frequency deviation		Wide	±5.0 kHz		
			Narrow	±2.5 kHz		
	Spurious emissions			Less than −60 dB		
	Microphone impedance			2200 Ω		
RECEIVER	**Receive system**			Direct Conversion		
	Sensitivity*2 (at 12 dB SINAD)			0.14 µV typical		
	Squelch sensitivity*2 (threshold)			0.11 µV typical		
	Adjacent channel selectivity		Wide	75 dB typical		
			Narrow	70 dB typical		
	Intermodulation			65 dB typical		
	Audio output power		Internal speaker	1.5 W typical (at 5% distortion into the 8 Ω load)		
			External speaker	0.55 W typical (at 5% distortion into an 8 Ω load)		

*1 For 144~160 MHz only.
*2 The input signal strength level of this receive sensitivity is measured at the load end (PD).

• **MAIN UNIT (TOP VIEW)**

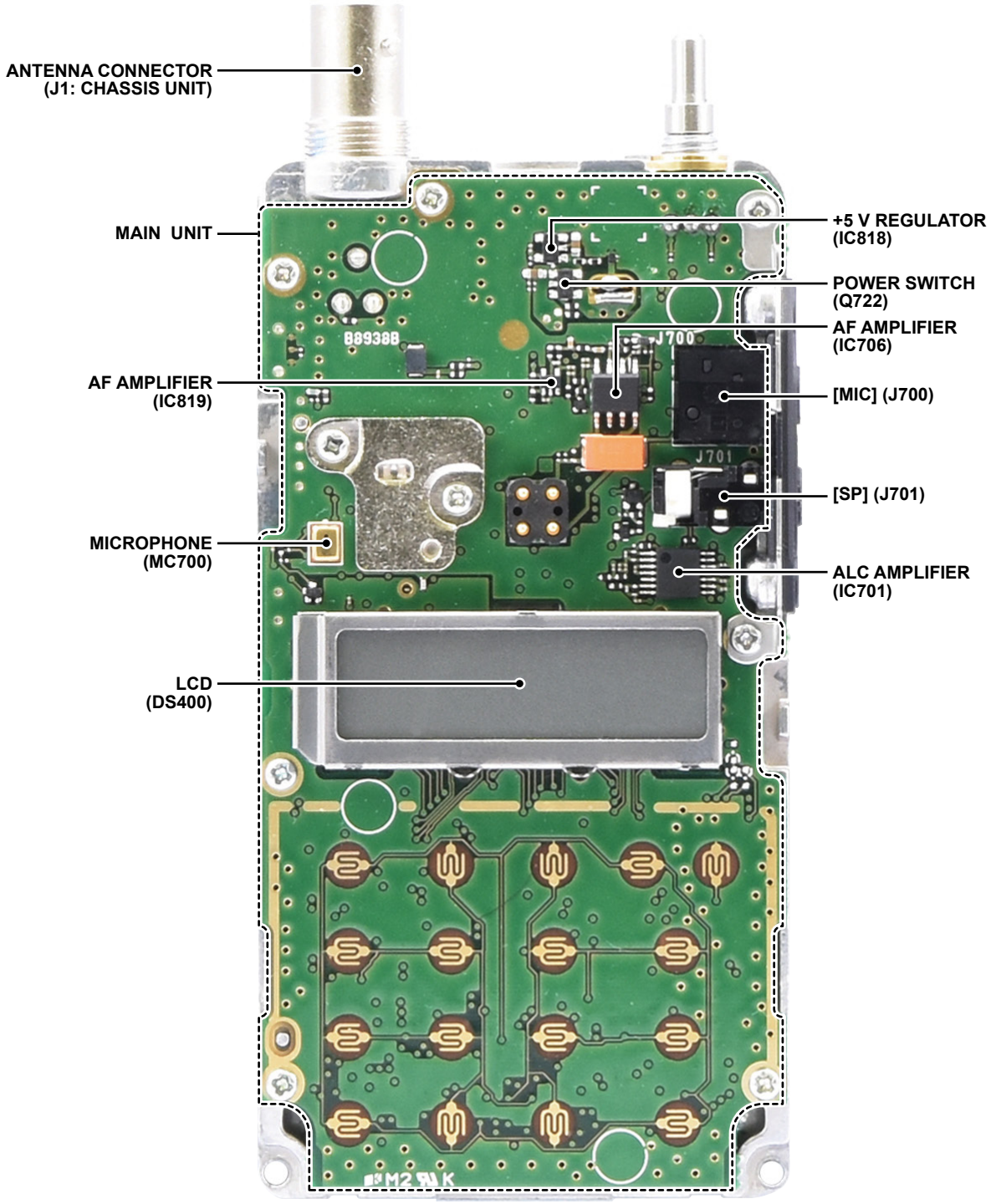

• **MAIN UNIT (BOTTOM VIEW)**

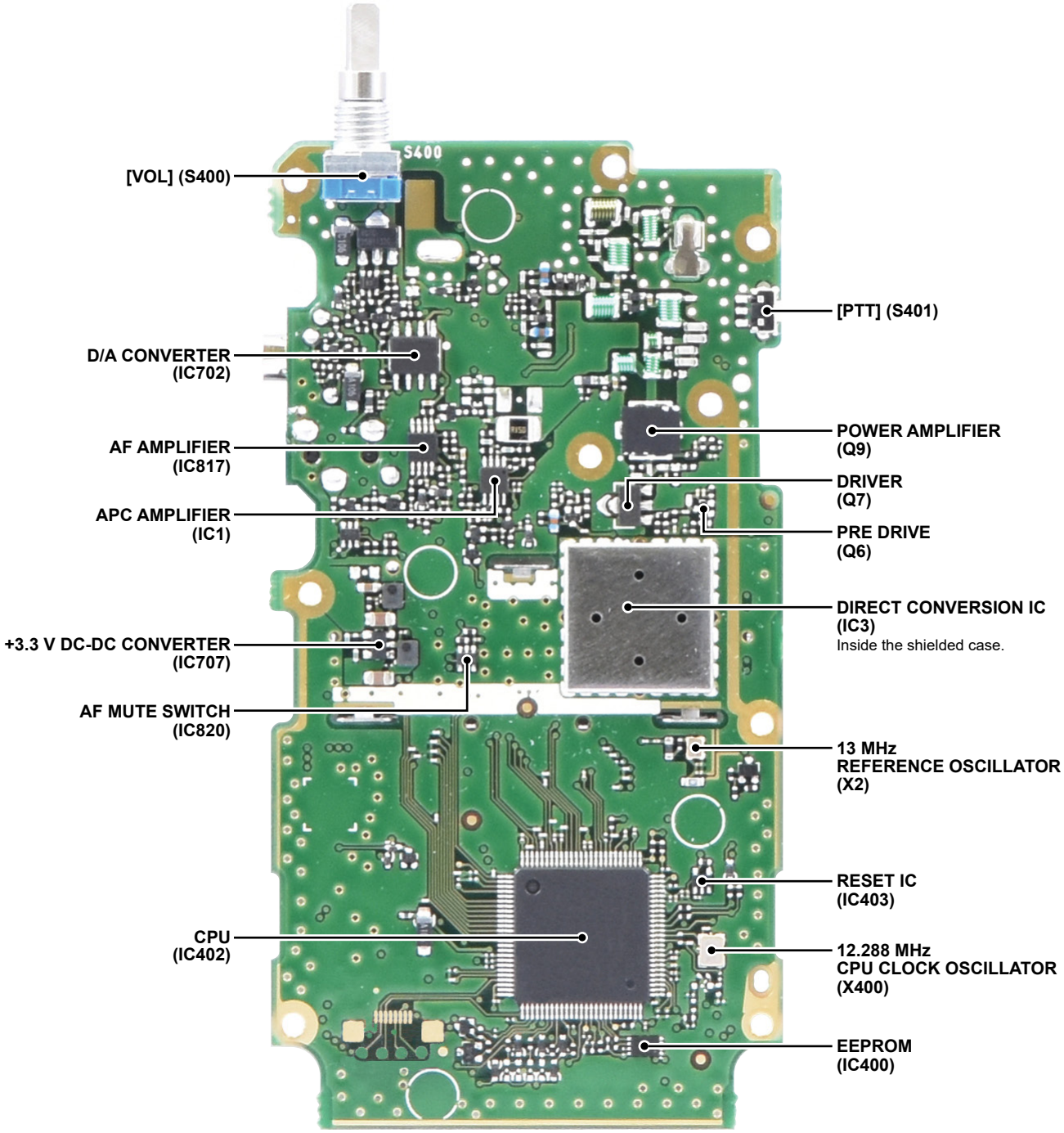

SECTION 3 DISASSEMBLY INSTRUCTIONS

1. REMOVING THE FRONT PANEL

1) Remove the volume knob and antenna nut from the top of the front panel.

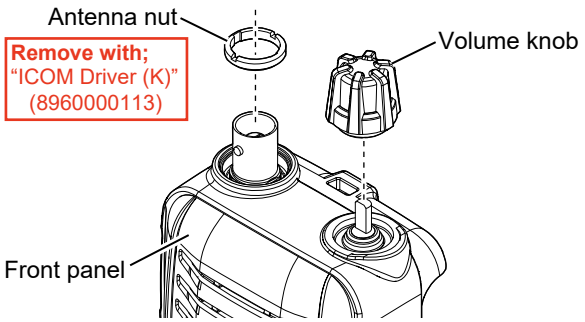

2) Remove the 2 screws from the bottom of the chassis.

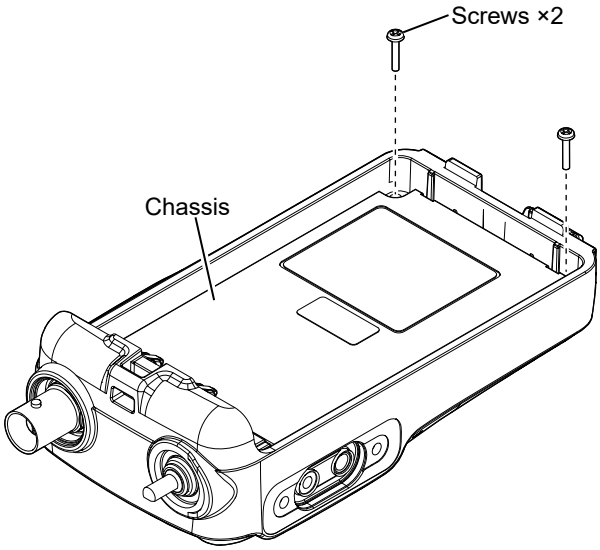

3) Remove the chassis from the front panel.

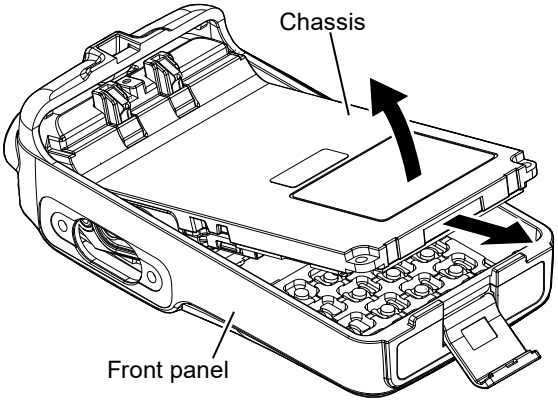

For easy separation of the CHASSIS
Use a suction lifter to lift the bottom of the CHASSIS up.

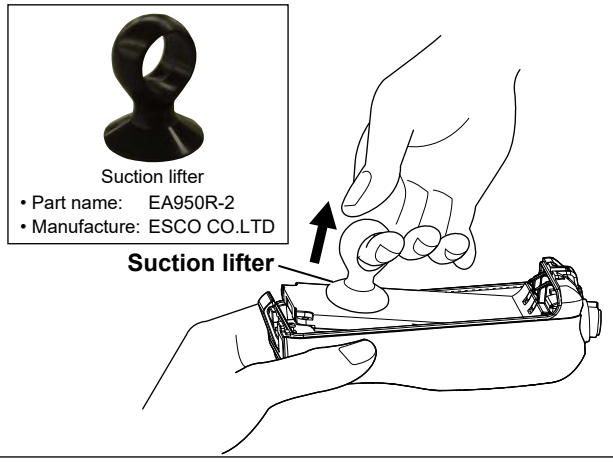

2. REMOVING THE MAIN UNIT

1) Unsolder a point at the plus terminal.

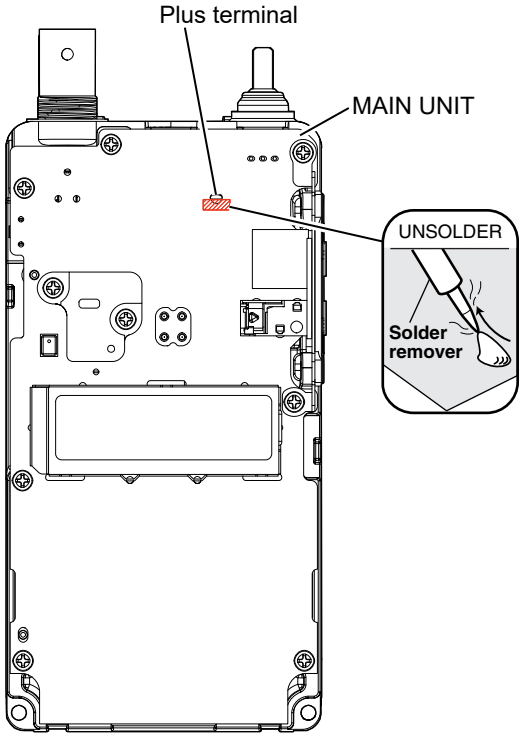

2) Remove the top seal and volume nut from the top of the chassis.

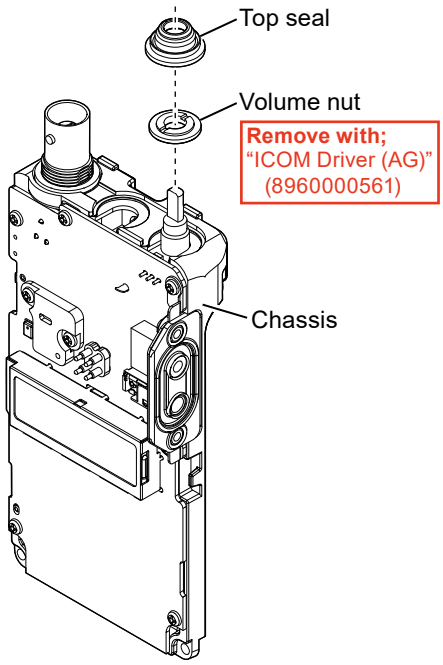

3) Remove the 7 screws from the MAIN UNIT.

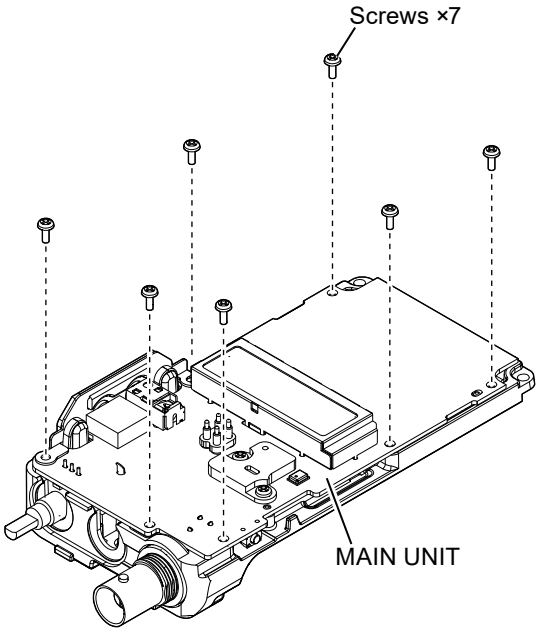

4) Remove the 2 screws from the heatsink of MAIN UNIT.

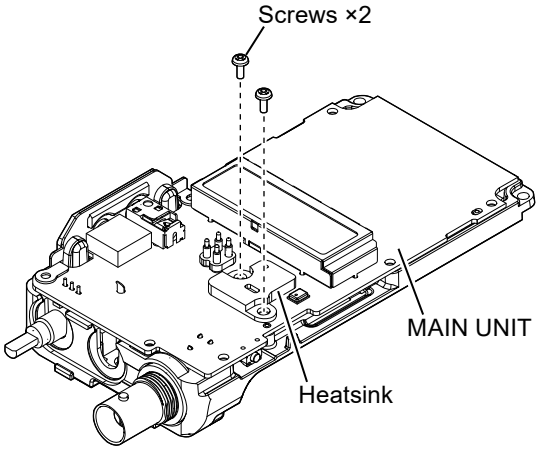

5) Remove the side plate from the chassis.

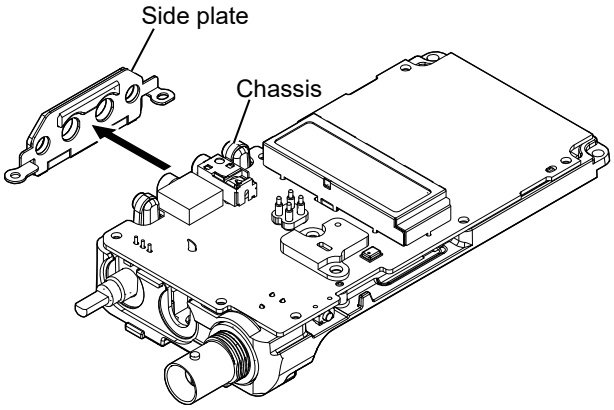

6) Remove the MAIN UNIT from the chassis.

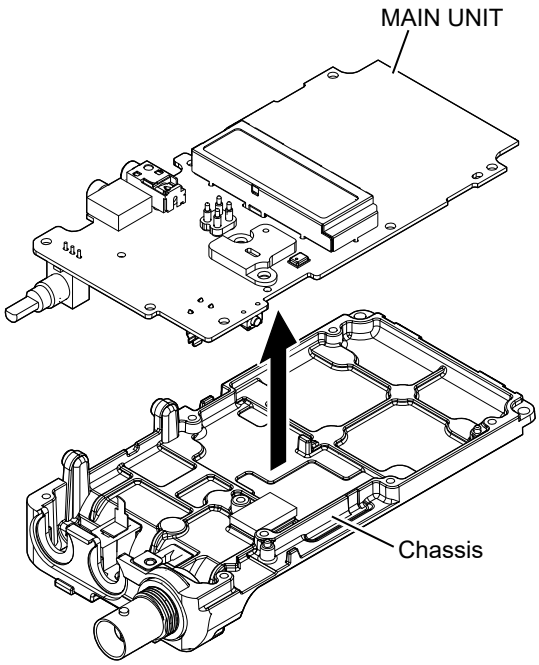

SECTION 4 ADJUSTMENT PROCEDURE

4-1 PREPARATION

■ REQUIRED EQUIPMENT

EQUIPMENT	GRADE AND RANGE		EQUIPMENT	GRADE AND RANGE	
DC power supply	Output voltage: Current capacity:	7.5 V 3 A or more	JIG battery case	Modified BP-263. (See the illustration shown on page 4-2.)	
Frequency counter	Range: Accuracy:	0.1~300 MHz ±1 ppm or better	JIG plug	Modified 3.5 mm (⅛ inch) stereo plug. (See the illustration shown on page 4-2.)	
Attenuator	Attenuation: Capacity:	30 dB or 40 dB More than 10 W	JIG cable 1	Modified 2.5 mm (1/10 inch) stereo plug. (See the illustration shown on page 4-2.)	
Audio generator (AG)	Frequency range: Output level:	300~3000 Hz 1~500 mV	JIG cable 2	Modified 3.5 mm (⅛ inch) stereo plug. (See the illustration shown on page 4-2.)	
RF power meter (50 Ω terminated)	Measuring range: Frequency range: SWR:	0.1~10 W 100~300 MHz Less than 1.2 : 1	Standard signal generator (SSG)	Frequency range: Output level:	0.1~300 MHz −20 to 90 dBμ (−127 to −17 dBm)
AC millivoltmeter	Measuring range:	10 mV to 10 V	Distortion meter	Measuring accuracy: Input level:	3% or less at 1 kHz 50 mV to 10 V
Modulation analyzer	Frequency range: Measuring range:	30~300 MHz 0 to ±10 kHz	External speaker	Input impedance: Capacity:	8 Ω More than 1 W
Spectrum analyzer	Measuring range:	Up to 3 GHz	Ammeter	Measuring range:	0 to 10 A

■ CONNECTIONS

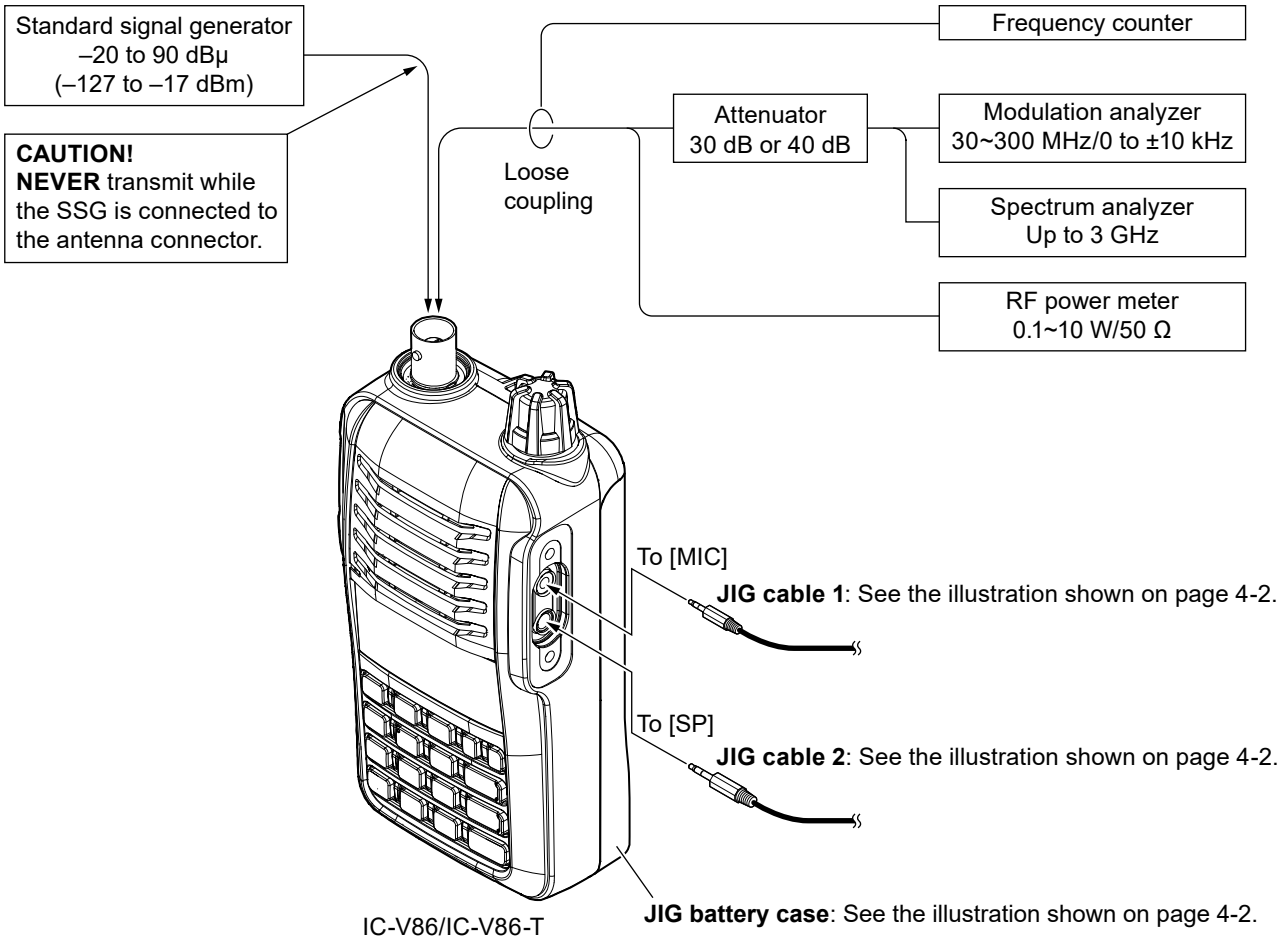

■ JIG

[JIG battery case]

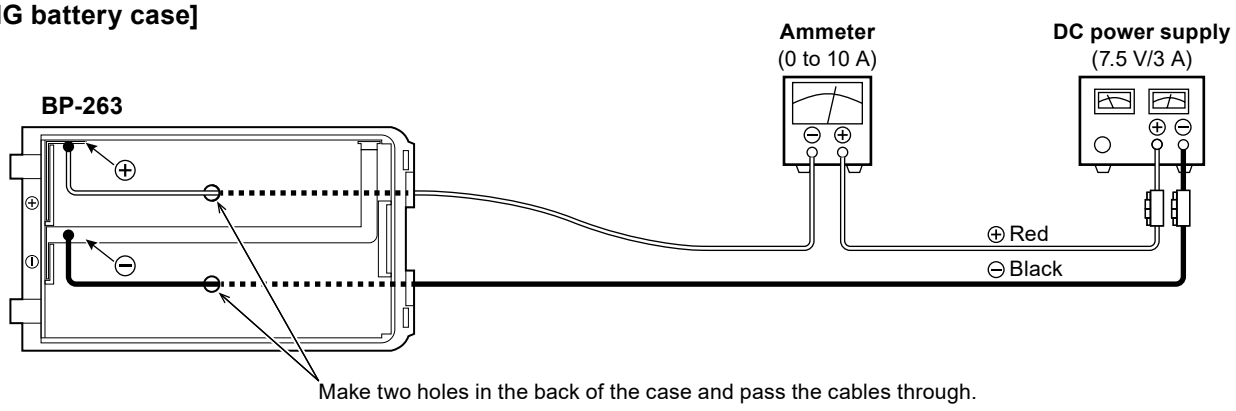

[JIG plug]

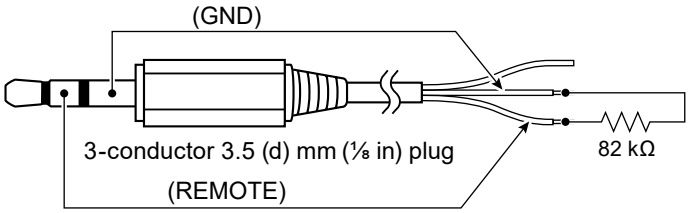

[JIG cable 1]

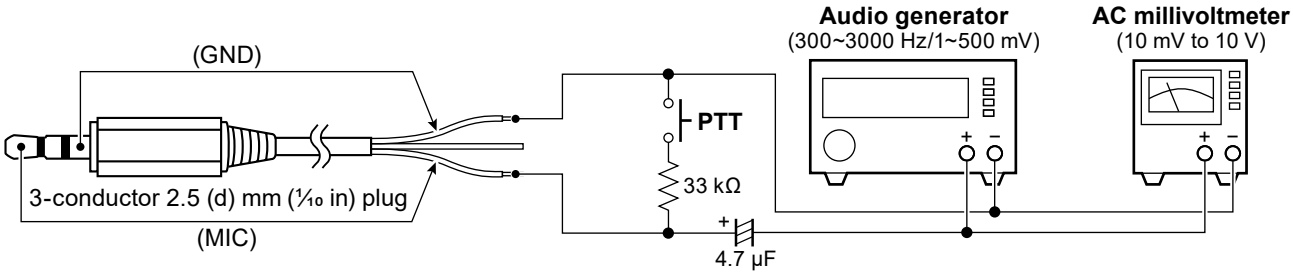

[JIG cable 2]

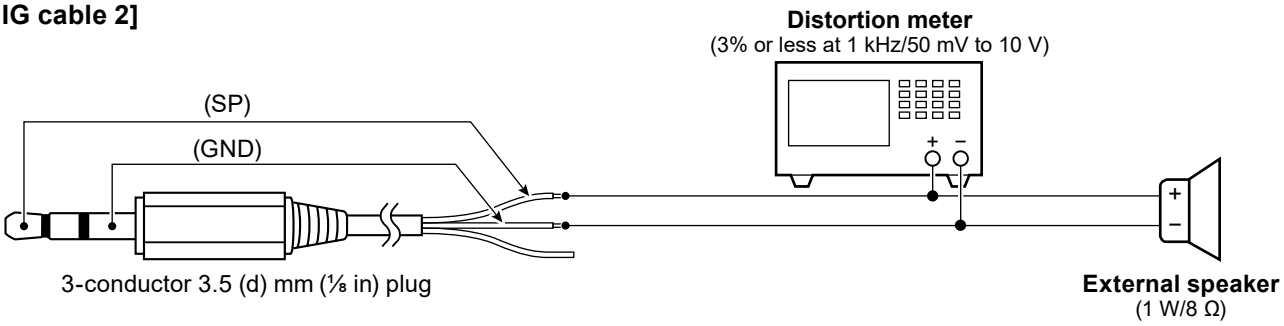

■ ENTERING THE ADJUST MODE

1. Turn OFF the power.
2. Connect the JIG plug to the [SP] connector.

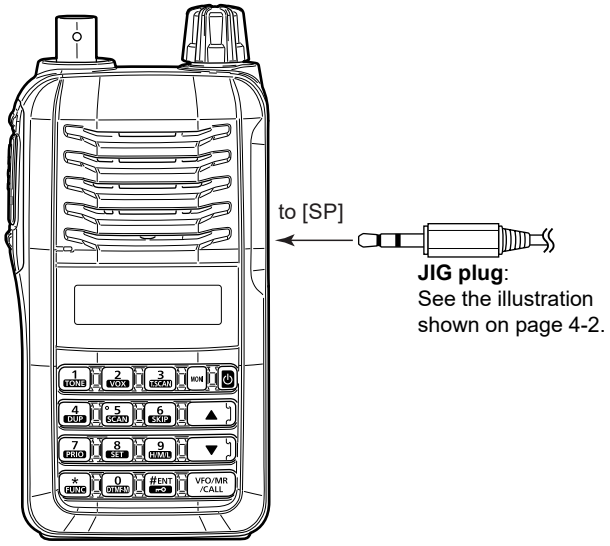

3. While holding down all [▲]/[▼] and [VFO/MR/CALL], turn ON the transceiver power to enter the adjust mode.

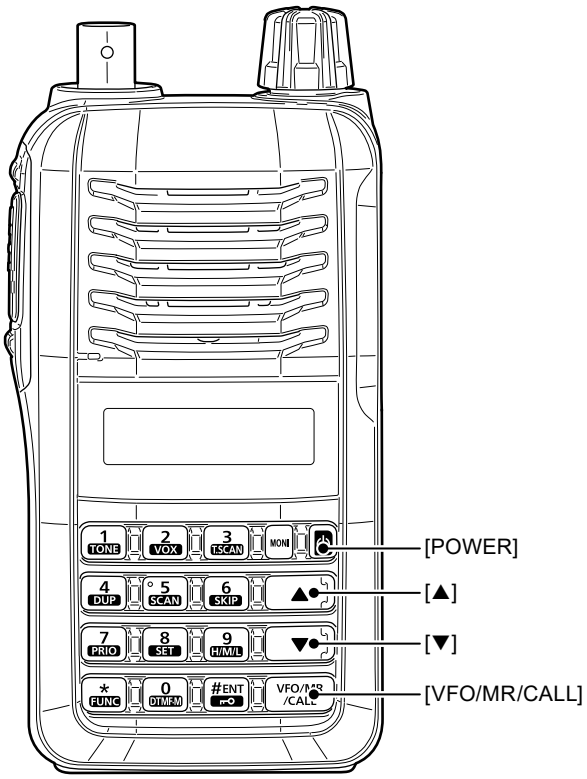

4. The adjust mode is displayed.

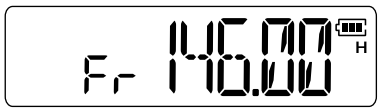

■ KEY ASSIGNMENTS FOR THE ADJUST MODE

- Push [▲] to select the next adjustment item, push [▼] to select the previous adjustment item.
- Rotate [VOL] to set or modify the adjustment value.
- Push [# ENT]•[⊶] to store the adjusted value, or start automatic adjustment.
- Push [*]•[FUNC] to briefly display the adjustment value.

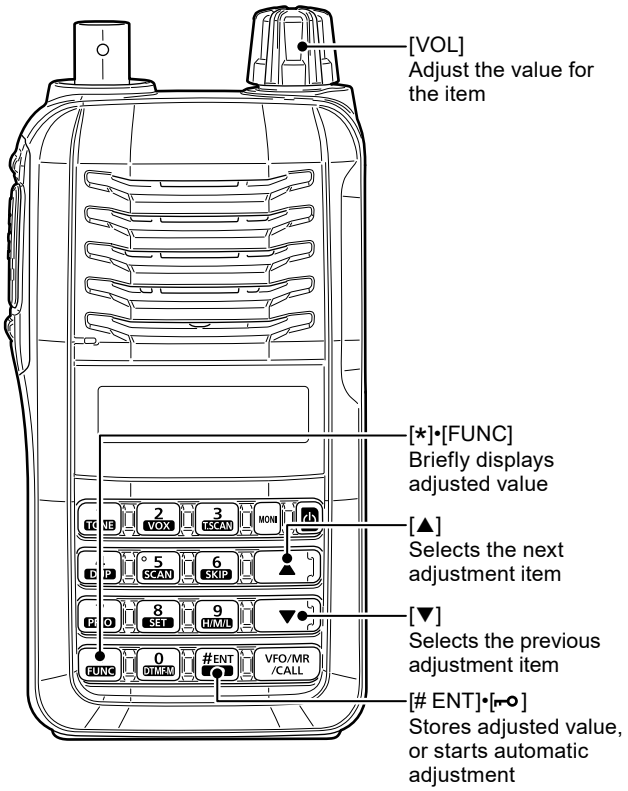

■ ADJUST MODE SCREENS

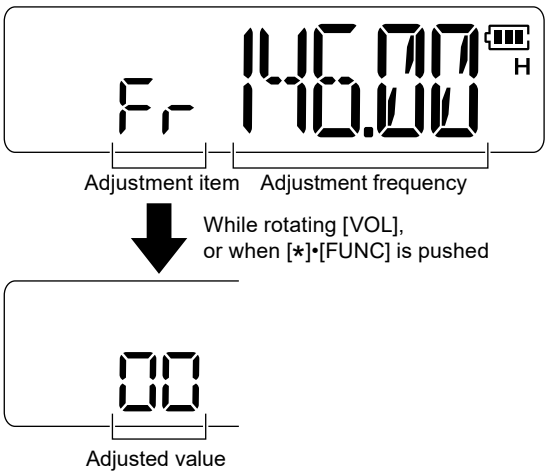

4-2 TRANSMIT ADJUSTMENTS

ADJUSTMENT		ADJUSTMENT ITEM DISPLAY	SETTING CONDITION	OPERATION
FREQUENCY -Verification-	1	Fr 146.000 H	• Connect the RF power meter or the dummy load to the antenna connector. • Loosely couple the frequency counter to the antenna connector. • Transmitting	146.000 MHz ±365 Hz (If out of the specified range, adjust the frequency by [VOL], then push [# ENT]•[⊸].)
TRANSMIT OUTPUT POWER -Adjustment- (Extra High)	1	P0 144.00 EXH	• Connect the RF power meter to the antenna connector. • While transmitting, adjust the connected DC power supply voltage to 7.5 V. • Transmitting	Set the transmit output power to 7.0 W ±0.2 W by [VOL], then push [# ENT]•[⊸]. Note the adjusted value as the reference value A.
(High)	2	P0 144.00 H		Set the transmit output power to 5.5 W ±0.2 W by [VOL], then push [# ENT]•[⊸]. Note the adjusted value as the reference value B.
(Middle)	3	P0 144.00 M		Set the transmit output power to 2.5 W ±0.2 W by [VOL], then push [# ENT]•[⊸]. Note the adjusted value as the reference value C.
(Low)	4	P0 144.00 L		Set the transmit output power to 0.5 W ±0.1 W by [VOL], then push [# ENT]•[⊸]. Note the adjusted value as the reference value D.
(Extra High)	5	P1 136.00 EXH	• Receiving	Set the adjustment value to the value that add 2 to the reference value B, then push [# ENT]•[⊸].
	6	P0 160.00 EXH		Set the adjustment value to the value that add 6 to the reference value A, then push [# ENT]•[⊸].
	7	P2 174.00 EXH		Set the adjustment value to the value that add 10 to the reference value B, then push [# ENT]•[⊸].
(High)	8	P3 136.00 H		Set the adjustment value to the value that add 2 to the reference value B, then push [# ENT]•[⊸].
	9	P0 160.00 H		Set the adjustment value to the value that subtract 2 to the reference value B, then push [# ENT]•[⊸].
	10	P4 174.00 H		Set the adjustment value to the value that add 10 to the reference value B, then push [# ENT]•[⊸].
(Middle)	11	P5 136.00 M		Set the adjustment value to the reference value C, then push [# ENT]•[⊸].
	12	P0 160.00 M		Set the adjustment value to the value that add 1 to the reference value C, then push [# ENT]•[⊸].
	13	P6 174.00 M		Set the adjustment value to the value that add 13 to the reference value C, then push [# ENT]•[⊸].
(Low)	14	P7 136.00 L		Set the adjustment value to the reference value D, then push [# ENT]•[⊸].
	15	P0 160.00 L		Set the adjustment value to the value that add 2 to the reference value D, then push [# ENT]•[⊸].
	16	P8 174.00 L		Set the adjustment value to the value that add 10 to the reference value D, then push [# ENT]•[⊸].

4-2 TRANSMIT ADJUSTMENTS (CONTINUED)

ADJUSTMENT		ADJUSTMENT ITEM DISPLAY	SETTING CONDITION	OPERATION
TRANSMIT OUTPUT POWER -Verification- (Extra High)	1	P1 136.00 EXH	• Connect the RF power meter to the antenna connector. • While transmitting, adjust the connected DC power supply voltage to 7.5 V. • Transmitting	4.5~6.5 W (If out of the specified range, adjust the output power by [VOL], then push [# ENT]•[⊸].)
	2	P0 160.00 EXH		6.0~8.0 W (If out of the specified range, adjust the output power by [VOL], then push [# ENT]•[⊸].)
	3	P2 174.00 EXH		4.5~6.5 W (If out of the specified range, adjust the output power by [VOL], then push [# ENT]•[⊸].)
(High)	4	P3 136.00 H		
	5	P0 160.00 H		
	6	P4 174.00 H		
(Middle)	7	P5 136.00 M		2.0~3.0 W (If out of the specified range, adjust the output power by [VOL], then push [# ENT]•[⊸].)
	8	P0 160.00 M		
	9	P6 174.00 M		
(Low)	10	P7 136.00 L		0.25~1.5 W (If out of the specified range, adjust the output power by [VOL], then push [# ENT]•[⊸].)
	11	P0 160.00 L		
	12	P8 174.00 L		
TRANSMITTING CURRENT -Verification-	1	P1 136.00 EXH	• Connect the ammeter between the JIG battery case and the DC power supply. • Transmitting	Less than 2.0 A
	2	P0 144.00 EXH		
	3	P0 160.00 EXH		
	4	P2 174.00 EXH		
SPURIOUS EMISSION -Verification-	1	P1 136.00 EXH	• Connect the spectrum analyzer to the antenna connector through the attenuator. • Transmitting	Less than −60 dBc
	2	P0 144.00 EXH		
	3	P0 160.00 EXH		
	4	P2 174.00 EXH		

4-2 TRANSMIT ADJUSTMENTS (CONTINUED)

ADJUSTMENT		ADJUSTMENT ITEM DISPLAY	SETTING CONDITION	OPERATION
MODULATION SENSITIVITY -Verification-	1	PO 144.000 EXH	• Connect the modulation analyzer to the antenna connector through the attenuator and set it to: HPF: OFF LPF: 20 kHz or 15 kHz De-emphasis: OFF Detector: (P−P)/2 • Connect the audio generator and the AC millivoltmeter to [MIC] through the JIG cable 1,and set it to: Frequency: 1 kHz Waveform: Sine wave Level: Adjust to the level so that the modulation analyzer shows ±1.50 kHz of deviation • Transmitting	10.0~20.0 mV (Audio generator output level)
TRANSMIT S/N RATIO -Verification-	1	PO 144.000 EXH	• Set the modulation analyzer to: HPF: 50 Hz LPF: 3 kHz De-emphasis: ON Detector: (P−P)/2 • Set the audio generator output level so that the modulation analyzer shows ±1.50 kHz of deviation. • Transmitting • Toggle the audio generator output ON and OFF.	More than 34 dB

4-3 RECEIVE ADJUSTMENTS

ADJUSTMENT		ADJUSTMENT ITEM DISPLAY	SETTING CONDITION	OPERATION
NOISE SQUELCH -Adjustment-	1	SQ 146.020	• Connect the standard signal generator (SSG) to the antenna connector and set it to: Frequency: 146.020 MHz Modulation: 1 kHz Deviation: ±1.5 kHz Level*: −17 dBμ (–124 dBm) • Receiving	Push [# ENT]•[⊶]. (Automatic adjustment)
S-METER -Adjustment-	1	SL 146.020	• Set the SSG as: Level*: −13 dBμ (–120 dBm) • Receiving	Push [# ENT]•[⊶]. (Automatic adjustment)
RECEIVE SENSITIVITY -Verification-	1	t1 136.020	• Connect the distortion meter and the external speaker to [SP] through the JIG cable 2. • Set the SSG as: Frequency: 136.020 MHz Level: Set to the level so that the distortion meter shows 12 dB SINAD. • Receiving	Less than −10 dBμ* (−117 dBm) (SSG output level)
	2	t2 155.020	• Set the SSG as: Frequency: 155.020 MHz Level: Set to the level so that the distortion meter shows 12 dB SINAD. • Receiving	
	3	t3 173.980	• Set the SSG as: Frequency: 173.980 MHz Level: Set to the level so that the distortion meter shows 12 dB SINAD. • Receiving	
AUDIO OUTPUT LEVEL -Verification-	1	t2 155.020	• Set the SSG as: Frequency: 155.020 MHz Level*: +60 dBμ (−47 dBm) • Receiving • Adjust the audio output level so that the distortion meter shows 5% of distortion.	More than 0.45 W (More than 1.90 V)
RECEIVE S/N RATIO -Verification-	1	t2 155.020	• Receiving • Adjust the audio output level so that the distortion meter shows 1.34 V. • Toggle the SSG's modulation ON and OFF.	More than 34 dB
	2	t1 136.020	• Set the SSG as: Frequency: 136.020 MHz • Receiving	
	3	t3 173.980	• Set the SSG as: Frequency: 173.980 MHz • Receiving	
RECEIVING CURRENT -Verification- (Maximum audio)	1	t3 173.980	• Connect the ammeter between the JIG battery case and the DC power supply. • Set the SSG modulation ON. • Receiving • Adjust the audio output to the maximum level.	Less than 0.6 A
(Stand-by)	2		• No optional unit is connected. • No RF signal is received. • Squelch closed.	Less than 80 mA
DEFAULT BATTERY PACK SETTING	1	bt 146.000	–	Select 01 (Ni-MH for #13) or 02 (Li-ion for #11, #12, and #31) by [VOL], then push [# ENT]•[⊶].

*The output level of the standard signal generator (SSG) is measured at the load end (PD).

SECTION 5 PARTS LIST

[MAIN UNIT]

REF NO.	PART NO.	DESCRIPTION	M.	H/V LOCATION
IC1	1110007010	S.IC NJM12904R-TE1-#ZZZB	B	34.7/29.4
IC3	1110010000	S.IC AT1846S	B	47.4/16.1
IC400	1130019660	S.IC BR24G128NUX-5TR	B	92.2/14.0
IC402	1140018490	S.IC STM32L073VBT6	B	81.0/20.5
IC403	1110007780	S.IC NJU7704F3-28A-TE1-#ZZZH	B	75.4/8.2
IC701	1110007630	S.IC NJM2783V-TE1-#ZZZH	T	39.6/41.5
IC702	1110010010	S.IC U2429G-S08-R	B	21.9/37.5
IC706	1110008450	S.IC ISD8102SYI T&R	T	21.7/35.4
IC707	6910027810	S.DC TPS561201DDCR	B	51.4/41.1
IC817	1110010140	S.IC TLV9002IDGKR	B	31.2/36.7
IC818	1180004950	S.REG XC6701B502MR-G	T	7.4/29.0
IC819	1110008890	S.IC NJU7056F3-TE2-#ZZZH	T	21.0/30.3
IC820	1130007021	S.IC TC7S66FU (TE85LF)	B	52.8/32.2
Q2	1590005410	S.TRA DTC014YEBTL	B	42.2/31.7
Q4	1590005560	S.TRA DTA014EEBTL	B	40.2/31.3
Q6	1530003322	S.TRA 2SC5108-YLF	B	37.6/8.0
Q7	1560002420	S.FET RD01MUS2B-T513	B	37.2/15.8
Q8	1530003322	S.TRA 2SC5108-YLF	B	38.4/21.4
Q9	1560002460	S.FET RD08MUS2-T512	B	29.6/13.4
Q10	1560002190	S.FET RUM002N02T2L	B	39.2/28.0
Q400	1530002851	S.TRA 2SC4116-BL (TE85RF)	B	64.2/3.5
Q401	1590005430	S.TRA DTC044TEBTL	B	90.2/32.4
Q703	1590004220	S.TRA DRA9123Y0L	B	21.6/45.8
Q704	1590005410	S.TRA DTC014YEBTL	T	41.5/5.3
Q705	1590005410	S.TRA DTC014YEBTL	B	18.1/41.4
Q706	1590004590	S.TRA DMC506010R	B	14.5/42.1
Q707	1520001010	S.TRA 2SB1132G-R-AB3-R	B	10.1/41.3
Q711	1590005410	S.TRA DTC014YEBTL	B	17.2/39.4
Q712	1590005410	S.TRA DTC014YEBTL	B	73.1/38.1
Q716	1590005410	S.TRA DTC014YEBTL	B	37.4/44.0
Q717	1510001270	S.TRA 2SAR502UBTL	B	37.3/39.7
Q718	1590005410	S.TRA DTC014YEBTL	T	35.5/36.2
Q720	1510001270	S.TRA 2SAR502UBTL	T	31.9/37.1
Q721	1590004230	S.TRA LMUN5213DW1T1G	B	40.2/44.1
Q722	1550000590	S.FET UT6401G-AG6-R	T	10.9/30.4
Q723	1560002190	S.FET RUM002N02T2L	B	14.6/31.5
D2	1750001810	S.DIO L1SS400T1G	B	40.4/25.8
D3	1790001830	S.VAR AVR-M1005C270MTAAB	B	25.5/20.1
D4	1720000701	S.VAR 1SV305 (TPH3F)	B	18.1/24.6
D5	1720000701	S.VAR 1SV305 (TPH3F)	B	16.3/25.3
D6	1750003940	S.DIO RN142SMT2R	B	15.3/15.1
D7	1750003940	S.DIO RN142SMT2R	B	13.0/20.1
D8	1750003940	S.DIO RN142SMT2R	B	13.0/21.3
D9	1750003830	S.DIO RB751CM-40T2R	B	13.3/22.5
D12	1750001810	S.DIO L1SS400T1G	B	74.4/5.4
D13	1750003940	S.DIO RN142SMT2R	B	15.3/16.3
D400	1750001810	S.DIO L1SS400T1G Only [#31]	B	94.7/28.1
D401	1750001810	S.DIO L1SS400T1G Only [#12]	B	94.7/25.7
D402	1750001810	S.DIO L1SS400T1G Only [#31]	B	94.7/24.5
D404	1750001810	S.DIO L1SS400T1G Only [#31]	B	94.7/26.9
D405	1750001810	S.DIO L1SS400T1G [#12]	T	57.3/46.9
	1750001810	S.DIO L1SS400T1G [#31]		
D407	1750001810	S.DIO L1SS400T1G Only [#31]	T	59.9/46.9
D408	1750001810	S.DIO L1SS400T1G	B	94.7/29.3
D409	1750001810	S.DIO L1SS400T1G	B	92.2/26.9
D410	1750001810	S.DIO L1SS400T1G	B	92.2/24.5
D411	1750001810	S.DIO L1SS400T1G	B	92.2/22.4
D413	1750001820	S.DIO LRB706F-40T1G	B	92.8/31.9
D700	1750003390	S.ZEN RCLAMP1521P.TCT	T	8.4/34.9
D705	1750001810	S.DIO L1SS400T1G	B	36.6/36.8
D706	1750001810	S.DIO L1SS400T1G	B	35.9/34.9
D708	1750001810	S.DIO L1SS400T1G	T	16.6/38.1
D711	1750003830	S.DIO RB751CM-40T2R	B	73.4/40.2
D714	1750003830	S.DIO RB751CM-40T2R	B	72.0/39.7
D717	1750001810	S.DIO L1SS400T1G	B	15.3/34.8
X2	6050014880	S.XTA CR-1079 (13 MHz)	B	61.9/8.9
X400	6050014200	S.XTA CR-1021 (12.288 MHz)	B	82.5/7.3
L3	6200013820	S.COI MLK1005S27NJT	B	36.7/9.5
L4	6200013830	S.COI MLK1005S22NJT	B	33.3/12.3
L5	6200017370	S.COI SDWL1608CR10GSTF 0.1U	B	38.8/23.3
L6	6200012540	S.COI 0.30-1.2-5TR 16.1N	B	22.7/16.1
L7	6200013010	S.COI 0.30-0.9-5TL 10.3N	B	22.9/13.3
L8	6200017390	S.COI SDWL1608C47NJSTF 47N	B	19.6/24.6
L9	6200012390	S.COI 0.30-0.92-3TR 5.8N	B	20.4/13.2
L10	6200012470	S.COI 0.30-1.7-7TL 45.3N	B	17.3/11.6
L11	6200002861	S.COI NLV25T-4R7J-PF	T	18.4/17.9
L12	6200017390	S.COI SDWL1608C47NJSTF 47N	B	14.7/23.9
L13	6200013820	S.COI MLK1005S27NJT	B	21.8/24.2
L15	6200012470	S.COI 0.30-1.7-7TL 45.3N	B	9.8/17.0
L16	6200012470	S.COI 0.30-1.7-7TL 45.3N	B	15.6/18.8
L17	6200012780	S.COI 0.30-1.4-6TL 27.2N	B	9.0/13.6
L19	6200003640	S.COI MLF1608E 100K-T	B	43.4/10.6
L22	6200003550	S.COI MLF1608A 4R7K-T	B	62.0/11.6
L702	6200017010	S.COI VLS252012CX-100M-1	B	52.2/38.2
L705	6200017010	S.COI VLS252012CX-100M-1	B	46.4/39.7
R1	7510001730	S.THE ERTJ0EP 473J	T	22.0/6.6
R2	7030014860	S.RES RGC1/16SC104DTH (100 k)	T	21.6/5.3
R4	7030021060	S.RES MCR25JZHFL R150 (0.15)	B	29.4/26.9

Eqv.= This component is equivalent to the REF No. component listed above, and may be substituted on parts orders and repairs.

[MAIN UNIT]

REF NO.	PART NO.	DESCRIPTION	M.	H/V LOCATION
R8	7030015520	S.RES RMC1/16JPTP	B	65.4/9.2
R10	7030016550	S.RES RMC1/16SK154FTH (150 k)	B	31.5/26.4
R11	7030016560	S.RES RMC1/16SJPTH	B	61.5/10.5
R12	7030016550	S.RES RMC1/16SK154FTH (150 k)	B	29.8/30.1
R13	7030017370	S.RES RGC1/16SC183DTH (18 k)	B	31.5/28.0
R14	7030015980	S.RES RMC1/16S-333JTH (33 k)	B	38.7/31.5
R16	7030016030	S.RES RMC1/16S-154JTH (150 k)	B	36.7/31.8
R17	7030015990	S.RES RMC1/16S-683JTH (68 k)	B	36.7/32.7
R18	7030015960	S.RES RMC1/16S-472JTH (4.7 k)	B	76.5/4.4
R19	7030015960	S.RES RMC1/16S-472JTH (4.7 k)	B	76.5/5.4
R20	7030016740	S.RES RMC1/16SK474DTH (470 k)	B	31.6/30.1
R21	7030016740	S.RES RMC1/16SK474DTH (470 k)	B	33.0/27.2
R23	7030016360	S.RES RMC1/16S-123JTH (12 k)	B	33.0/25.6
R24	7030015900	S.RES RMC1/16S-470JTH (47)	B	52.9/17.9
R26	7030016030	S.RES RMC1/16S-154JTH (150 k)	B	37.7/30.0
R27	7030016050	S.RES RMC1/16S-102JTH (1 k)	B	50.9/14.6
R28	7030017370	S.RES RGC1/16SC183DTH (18 k)	B	30.7/30.1
R30	7030016050	S.RES RMC1/16S-102JTH (1 k)	B	37.7/28.4
R32	7030016120	S.RES RMC1/16S-682JTH (6.8 k)	B	40.9/27.7
R33	7030016110	S.RES RMC1/16S-473JTH (47 k)	B	43.2/18.0
R36	7030015910	S.RES RMC1/16S-101JTH (100)	B	39.5/9.1
R37	7030016120	S.RES RMC1/16S-682JTH (6.8 k)	B	39.0/7.9
R38	7030016150	S.RES RMC1/16S-100JTH (10)	B	35.8/7.2
R41	7030016180	S.RES RMC1/16S-680JTH (68)	B	38.3/11.0
R42	7030016510	S.RES RMC1/16S-4R7JTH (4.7)	B	38.2/12.3
R44	7030015980	S.RES RMC1/16S-333JTH (33 k)	B	39.5/11.9
R45	7030016250	S.RES RMC1/16S-220JTH (22)	B	38.5/24.6
R46	7030015920	S.RES RMC1/16S-221JTH (220)	B	36.7/23.3
R47	7030015910	S.RES RMC1/16S-101JTH (100)	B	36.4/21.7
R48	7030016090	S.RES RMC1/16S-223JTH (22 k)	B	39.5/12.8
R49	7030016390	S.RES RMC1/16S-184JTH (180 k)	B	37.8/19.9
R50	7030016390	S.RES RMC1/16S-184JTH (180 k)	B	36.2/19.9
R51	7030016250	S.RES RMC1/16S-220JTH (22)	B	32.1/9.3
R52	7030015960	S.RES RMC1/16S-472JTH (4.7 k)	B	30.9/7.2
R53	7030016000	S.RES RMC1/16S-823JTH (82 k)	B	30.9/8.1
R55	7030016290	S.RES RMC1/16S-222JTH (2.2 k)	B	17.5/26.4
R56	7030016050	S.RES RMC1/16S-102JTH (1 k)	B	17.1/27.6
R57	7030016290	S.RES RMC1/16S-222JTH (2.2 k)	B	15.9/26.4
R58	7030016370	S.RES RMC1/16S-271JTH (270)	T	18.8/21.1
R59	7030016370	S.RES RMC1/16S-271JTH (270)	T	17.9/21.1
R60	7030015990	S.RES RMC1/16S-683JTH (68 k)	T	14.6/9.0
R67	7030016110	S.RES RMC1/16S-473JTH (47 k)	B	40.1/29.4
R400	7030016290	S.RES RMC1/16S-222JTH (2.2 k)	B	64.6/5.3
R401	7030016440	S.RES RMC1/16S-272JTH (2.7 k)	B	66.5/4.9
R402	7030016110	S.RES RMC1/16S-473JTH (47 k)	B	92.7/19.8
R403	7030016110	S.RES RMC1/16S-473JTH (47 k)	B	92.2/18.6
R404	7030016050	S.RES RMC1/16S-102JTH (1 k)	B	92.1/28.0
R405	7030016050	S.RES RMC1/16S-102JTH (1 k)	B	91.9/25.7
R406	7030016050	S.RES RMC1/16S-102JTH (1 k)	B	92.6/23.5
R407	7030016050	S.RES RMC1/16S-102JTH (1 k)	B	92.5/21.4
R409	7030015970	S.RES RMC1/16S-103JTH (10 k)	B	90.1/15.8
R410	7030015970	S.RES RMC1/16S-103JTH (10 k)	B	72.0/12.3
R411	7030015970	S.RES RMC1/16S-103JTH (10 k)	B	72.0/13.3
R412	7030015960	S.RES RMC1/16S-472JTH (4.7 k)	B	91.5/17.4
R413	7030015960	S.RES RMC1/16S-472JTH (4.7 k)	B	92.4/17.4
R416	7030015900	S.RES RMC1/16S-470JTH (47)	B	79.1/10.0
R417	7030015900	S.RES RMC1/16S-470JTH (47)	B	78.2/10.0
R421	7030016060	S.RES RMC1/16S-105JTH (1 M)	B	81.3/10.5
R425	7030016110	S.RES RMC1/16S-473JTH (47 k)	B	89.4/9.6
R426	7030016330	S.RES RMC1/16S-153JTH (15 k)	B	90.8/30.8
R427	7030016830	S.RES RGC1/16SC153DTH (15.0 k)	B	92.3/30.0
R428	7030016560	S.RES RMC1/16SJPTH	B	69.6/17.4
R429	7030015970	S.RES RMC1/16S-103JTH (10 k)	B	73.5/7.9
R430	7030016180	S.RES RMC1/16S-680JTH (68)	B	66.0/3.3
R702	7030016500	S.RES RMC1/16S-562JTH (5.6 k)	B	29.9/33.9
R703	7030016000	S.RES RMC1/16S-823JTH (82 k)	B	31.1/34.4
R704	7030016110	S.RES RMC1/16S-473JTH (47 k)	B	33.4/34.5
R705	7030016110	S.RES RMC1/16S-473JTH (47 k)	B	34.6/34.8
R706	7030015930	S.RES RMC1/16S-471JTH (470)	B	23.1/45.6
R708	7030015980	S.RES RMC1/16S-333JTH (33 k)	B	27.7/36.2
R712	7030016190	S.RES RMC1/16S-273JTH (27 k)	B	21.4/44.2
R713	7030016110	S.RES RMC1/16S-473JTH (47 k)	B	21.4/43.0
R715	7030015980	S.RES RMC1/16S-333JTH (33 k)	T	37.1/2.1
R716	7030015970	S.RES RMC1/16S-103JTH (10 k)	B	20.1/40.7
R717	7030015970	S.RES RMC1/16S-103JTH (10 k)	B	24.1/40.7
R720	7030016050	S.RES RMC1/16S-102JTH (1 k)	B	16.5/43.2
R721	7030016110	S.RES RMC1/16S-473JTH (47 k)	B	15.3/44.1
R723	7030015970	S.RES RMC1/16S-103JTH (10 k)	B	37.3/35.7
R724	7030016020	S.RES RMC1/16S-104JTH (100 k)	B	37.7/34.5
R725	7030016340	S.RES RMC1/16S-393JTH (39 k)	T	36.3/42.6
R726	7030015980	S.RES RMC1/16S-333JTH (33 k)	T	40.9/35.4
R727	7030016350	S.RES RMC1/16S-122JTH (1.2 k)	T	40.0/35.9
R728	7030016050	S.RES RMC1/16S-102JTH (1 k)	T	40.0/34.3
R729	7030015910	S.RES RMC1/16S-101JTH (100)	T	19.0/38.8
R731	7030016050	S.RES RMC1/16S-102JTH (1 k)	B	16.5/41.6
R732	7030015970	S.RES RMC1/16S-103JTH (10 k)	T	39.6/46.1
R733	7030016030	S.RES RMC1/16S-154JTH (150 k)	B	34.8/37.4
R734	7030016340	S.RES RMC1/16S-393JTH (39 k)	T	41.3/37.2
R735	7030016050	S.RES RMC1/16S-102JTH (1 k)	B	36.1/37.8
R738	7030016050	S.RES RMC1/16S-102JTH (1 k)	B	13.9/40.3
R739	7030016330	S.RES RMC1/16S-153JTH (15 k)	B	15.5/40.3
R740	7030016910	S.RES RGC1/16SC393DTH (39 k)	T	8.7/31.7
R742	7030016330	S.RES RMC1/16S-153JTH (15 k)	B	38.8/37.9
R745	7030016430	S.RES RMC1/16S-392JTH (3.9 k)	B	15.5/39.4
R746	7030016830	S.RES RGC1/16SC153DTH (15.0 k)	T	8.7/33.3
R750	7030016330	S.RES RMC1/16S-153JTH (15 k)	B	39.5/36.3
R751	7030016020	S.RES RMC1/16S-104JTH (100 k)	T	17.5/35.9
R752	7030016020	S.RES RMC1/16S-104JTH (100 k)	T	16.6/35.9

M.= Mounted side (T: Mounted on the Top side, B: Mounted on the Bottom side)
H/V LOCATION=See the BOARD LAYOUTS for details.

[MAIN UNIT]

REF NO.	PARTS NO.	DESCRIPTION	M.	H/V LOCATION
R753	7030016020	S.RES RMC1/16S-104JTH (100 k)	B	17.7/37.4
R759	7030015970	S.RES RMC1/16S-103JTH (10 k)	B	47.1/42.1
R762	7030016810	S.RES RGC1/16SC392DTH (3.90 k)	B	50.9/43.5
R763	7030017510	S.RES RGC1/16SC272DTH (2.7 k)	B	52.5/43.5
R765	7030016050	S.RES RMC1/16S-102JTH (1 k)	B	25.8/40.8
R767	7030016880	S.RES RGC1/16SC223DTH (22.0 k)	B	50.9/44.4
R769	7030015910	S.RES RMC1/16S-101JTH (100)	B	37.0/45.7
R771	7030016110	S.RES RMC1/16S-473JTH (47 k)	B	37.1/41.6
R773	7030016050	S.RES RMC1/16S-102JTH (1 k)	B	37.1/42.5
R780	7030016110	S.RES RMC1/16S-473JTH (47 k)	T	33.8/37.4
R781	7030016050	S.RES RMC1/16S-102JTH (1 k)	T	35.0/37.7
R784	7030015960	S.RES RMC1/16S-472JTH (4.7 k)	B	42.0/40.0
R785	7030015950	S.RES RMC1/16S-152JTH (1.5 k)	B	41.5/42.4
R786	7030016410	S.RES RMC1/16S-561JTH (560)	B	41.5/41.5
R787	7030016020	S.RES RMC1/16S-104JTH (100 k)	B	41.1/40.0
R788	7030015970	S.RES RMC1/16S-103JTH (10 k)	T	36.9/38.3
R789	7030016040	S.RES RMC1/16S-224JTH (220 k)	T	37.9/37.1
R790	7030016020	S.RES RMC1/16S-104JTH (100 k)	T	13.1/31.0
R791	7030016020	S.RES RMC1/16S-104JTH (100 k)	T	14.0/31.0
R795	7030016340	S.RES RMC1/16S-393JTH (39 k)	T	17.3/32.1
R796	7030016000	S.RES RMC1/16S-823JTH (82 k)	T	17.8/30.9
R797	7030016110	S.RES RMC1/16S-473JTH (47 k)	T	20.5/28.5
R798	7030016110	S.RES RMC1/16S-473JTH (47 k)	T	22.1/28.5
R799	7030016060	S.RES RMC1/16S-105JTH (1 M)	B	16.1/32.6
R800	7030016060	S.RES RMC1/16S-105JTH (1 M)	B	16.3/31.4
R801	7030015950	S.RES RMC1/16S-152JTH (1.5 k)	B	23.0/47.2
R803	7030016410	S.RES RMC1/16S-561JTH (560)	B	31.1/33.5
R804	7030015990	S.RES RMC1/16S-683JTH (68 k)	T	18.3/32.1
R805	7030016020	S.RES RMC1/16S-104JTH (100 k)	T	20.2/32.1
R806	7030016060	S.RES RMC1/16S-105JTH (1 M)	B	50.0/31.9
R807	7030016060	S.RES RMC1/16S-105JTH (1 M)	B	50.9/32.6
R808	7030016110	S.RES RMC1/16S-473JTH (47 k)	B	34.3/32.6
C19	4030022140	S.CER GRM033B31H102KA12D	B	37.8/32.1
C20	4030022100	S.CER GRM0332C1H100JA01D	B	32.8/26.4
C22	4030022140	S.CER GRM033B31H102KA12D	B	50.2/19.5
C23	4030022160	S.CER GRM033B31A104KE84D	B	36.3/27.1
C24	4030022160	S.CER GRM033B31A104KE84D	B	50.8/19.5
C25	4030022260	S.CER GRM033R60J105MEA2D	T	42.3/8.9
C26	4030022160	S.CER GRM033B31A104KE84D	B	38.7/30.1
C28	4030022160	S.CER GRM033B31A104KE84D	B	47.0/12.0
C29	4030022140	S.CER GRM033B31H102KA12D	B	47.0/12.6
C32	4030022160	S.CER GRM033B31A104KE84D	B	47.9/12.3
C33	4030022160	S.CER GRM033B31A104KE84D	B	45.1/12.8
C35	4030022140	S.CER GRM033B31H102KA12D	B	45.1/12.2
C36	4030022260	S.CER GRM033R60J105MEA2D	B	39.3/26.7
C37	4550007520	S.TAN F931A106MAABMA	B	44.6/8.9
C38	4030025320	S.CER GRM0332C1H151JA01D	B	39.8/7.7
C42	4030022140	S.CER GRM033B31H102KA12D	B	36.0/8.0
C45	4030022140	S.CER GRM033B31H102KA12D	B	36.0/8.6
C46	4030022080	S.CER GRM0332C1H101JA01D	B	37.9/9.8
C47	4030022140	S.CER GRM033B31H102KA12D	B	39.7/11.0
C49	4030022140	S.CER GRM033B31H102KA12D	B	36.6/22.5
C52	4030022120	S.CER GRM0332C1H470JA01D	B	39.8/20.2
C53	4030022140	S.CER GRM033B31H102KA12D	B	34.3/11.8
C54	4030022140	S.CER GRM033B31H102KA12D	B	36.6/20.9
C57	4030022680	S.CER 0402N150J500CT	B	34.2/14.8
C58	4030023090	S.CER 0402B102K500CT	B	24.7/17.0
C59	4030022920	S.CER 0402N820J500CT	B	33.5/13.5
C62	4030022740	S.CER 0402N220J500CT	B	20.9/24.2
C64	4030022140	S.CER GRM033B31H102KA12D	B	31.1/8.9
C65	4030023330	S.CER 0603N4R0B500CT	B	21.4/9.8
C67	4030023720	S.CER 0603N470J500CT	B	22.6/9.8
C68	4030022640	S.CER 0402N101J500CT	B	19.1/26.4
C69	4030023520	S.CER 0603N180J500CT	B	20.2/8.9
C71	4030022160	S.CER GRM033B31A104KE84D	B	16.1/27.8
C73	4030023090	S.CER 0402B102K500CT	B	16.1/13.8
C75	4030022560	S.CER 0402N5R0B500CT	B	16.8/23.8
C76	4030023520	S.CER 0603N180J500CT	B	19.0/8.9
C79	4030022140	S.CER GRM033B31H102KA12D	T	18.2/20.0
C81	4030022740	S.CER 0402N220J500CT	B	16.1/9.4
C82	4030022640	S.CER 0402N101J500CT	B	14.2/25.2
C84	4030023090	S.CER 0402B102K500CT	B	13.3/16.3
C86	4030022680	S.CER 0402N150J500CT	B	10.3/19.3
C88	4030022520	S.CER 0402N1R0B500CT	B	9.1/18.9
C89	4030022700	S.CER 0402N180J500CT	B	13.3/17.4
C90	4030022630	S.CER 0402N100C500CT	B	15.0/21.6
C93	4030022700	S.CER 0402N180J500CT	B	13.3/19.0
C94	4030022660	S.CER 0402N120J500CT	B	7.3/14.2
C95	4030022770	S.CER 0402N270J500CT	B	6.0/14.7
C101	4030022590	S.CER 0402N8R0C500CT	B	7.3/12.6
C109	4030022260	S.CER GRM033R60J105MEA2D	B	63.6/8.5
C110	4030022260	S.CER GRM033R60J105MEA2D	B	64.4/8.5
C113	4030022140	S.CER GRM033B31H102KA12D	B	61.2/12.8
C114	4030022090	S.CER GRM0332C1H330JA01D	B	61.2/14.0
C115	4030022160	S.CER GRM033B31A104KE84D	B	42.6/17.1
C116	4030022140	S.CER GRM033B31H102KA12D	B	42.6/16.5
C117	4030022160	S.CER GRM033B31A104KE84D	B	52.3/16.3
C118	4030022140	S.CER GRM033B31H102KA12D	B	52.3/16.9
C120	4030022530	S.CER 0402N2R0B500CT	B	43.5/14.8
C122	4030022530	S.CER 0402N2R0B500CT	B	46.0/12.0
C124	4030022530	S.CER 0402N2R0B500CT	T	40.7/16.2
C405	4030022160	S.CER GRM033B31A104KE84D	B	71.8/19.6
C408	4030025440	S.CER GRM0332C1E271JA01D	B	70.8/17.1
C409	4030022160	S.CER GRM033B31A104KE84D	B	70.7/16.0
C410	4030022160	S.CER GRM033B31A104KE84D	B	71.8/20.2
C411	4030022160	S.CER GRM033B31A104KE84D	B	71.0/22.5
C412	4030022160	S.CER GRM033B31A104KE84D	B	71.0/23.2
C413	4030025350	S.CER GRM0332C1H120JA01D	B	80.3/7.8
C414	4030022160	S.CER GRM033B31A104KE84D	B	70.4/15.1
C415	4030022160	S.CER GRM033B31A104KE84D	B	71.0/26.5
C416	4030025350	S.CER GRM0332C1H120JA01D	B	81.7/9.5
C417	4030022260	S.CER GRM033R60J105MEA2D	B	76.8/9.7
C418	4030022160	S.CER GRM033B31A104KE84D	B	76.8/10.3

Eqv.= This component is equivalent to the REF No. component listed above, and may be substituted on parts orders and repairs.

[MAIN UNIT]

REF NO.	PARTS NO.	DESCRIPTION	M.	H/V LOCATION
C420	4030022260	S.CER GRM033R60J105MEA2D	B	77.3/10.9
C421	4030022160	S.CER GRM033B31A104KE84D	B	77.3/11.5
C425	4030025400	S.CER GRM033R61A273KE84D	B	77.1/8.7
C426	4030022160	S.CER GRM033B31A104KE84D	B	87.6/29.1
C427	4030022260	S.CER GRM033R60J105MEA2D	B	84.8/11.1
C428	4030022160	S.CER GRM033B31A104KE84D	B	90.1/14.0
C429	4550007520	S.TAN F931A106MAABMA	B	80.5/36.5
C430	4030022140	S.CER GRM033B31H102KA12D	B	64.6/20.2
C437	4030022140	S.CER GRM033B31H102KA12D	B	83.3/11.1
C446	4030022140	S.CER GRM033B31H102KA12D	B	84.0/11.1
C451	4030022120	S.CER GRM0332C1H470JA01D	B	62.6/17.3
C452	4030022120	S.CER GRM0332C1H470JA01D	B	62.0/18.0
C453	4030022120	S.CER GRM0332C1H470JA01D	B	71.8/24.5
C454	4030022120	S.CER GRM0332C1H470JA01D	B	64.0/15.9
C455	4030022120	S.CER GRM0332C1H470JA01D	B	65.0/15.9
C456	4030022120	S.CER GRM0332C1H470JA01D	B	87.8/13.1
C457	4030022120	S.CER GRM0332C1H470JA01D	B	65.9/17.0
C458	4030022120	S.CER GRM0332C1H470JA01D	B	70.2/20.3
C459	4030022120	S.CER GRM0332C1H470JA01D	B	64.5/24.1
C460	4030022120	S.CER GRM0332C1H470JA01D	B	65.4/24.2
C461	4030022120	S.CER GRM0332C1H470JA01D	B	70.0/22.3
C462	4030022120	S.CER GRM0332C1H470JA01D	B	69.4/23.4
C463	4030022120	S.CER GRM0332C1H470JA01D	B	70.8/24.4
C464	4030022120	S.CER GRM0332C1H470JA01D	B	70.2/25.0
C465	4030022120	S.CER GRM0332C1H470JA01D	B	72.0/25.8
C466	4030022120	S.CER GRM0332C1H470JA01D	B	74.7/29.5
C467	4030022120	S.CER GRM0332C1H470JA01D	B	74.6/33.1
C468	4030022120	S.CER GRM0332C1H470JA01D	B	60.3/35.3
C469	4030022120	S.CER GRM0332C1H470JA01D	B	61.3/35.5
C470	4030022120	S.CER GRM0332C1H470JA01D	B	62.2/35.5
C471	4030022120	S.CER GRM0332C1H470JA01D	B	63.2/35.5
C472	4030022120	S.CER GRM0332C1H470JA01D	B	69.0/35.3
C473	4030022120	S.CER GRM0332C1H470JA01D	B	62.7/37.2
C474	4030022120	S.CER GRM0332C1H470JA01D	B	62.0/37.8
C475	4030022120	S.CER GRM0332C1H470JA01D	B	77.4/36.4
C477	4030022120	S.CER GRM0332C1H470JA01D	B	85.5/33.7
C700	4030022260	S.CER GRM033R60J105MEA2D	B	24.5/47.1
C702	4030022960	S.CER 0402B333K100CT	B	32.0/32.5
C703	4030022260	S.CER GRM033R60J105MEA2D	B	32.3/33.7
C707	4030022260	S.CER GRM033R60J105MEA2D	B	34.5/34.0
C708	4030023190	S.CER 0402B392K500CT	B	26.8/36.2
C710	4030022160	S.CER GRM033B31A104KE84D	B	22.2/43.2
C711	4030022260	S.CER GRM033R60J105MEA2D	B	25.6/34.7
C724	4030022260	S.CER GRM033R60J105MEA2D	T	37.0/1.3
C726	4030022160	S.CER GRM033B31A104KE84D	B	20.3/44.2
C731	4030022260	S.CER GRM033R60J105MEA2D	B	36.9/34.4
C734	4030022160	S.CER GRM033B31A104KE84D	T	38.8/46.0
C735	4030022260	S.CER GRM033R60J105MEA2D	B	14.4/43.9
C738	4030022260	S.CER GRM033R60J105MEA2D	T	40.4/46.0
C740	4030022260	S.CER GRM033R60J105MEA2D	B	34.9/36.2
C741	4030025440	S.CER GRM0332C1E271JA01D	T	41.2/36.4
C742	4030022150	S.CER GRM033B31E103KA12D	B	14.1/39.5
C744	4030022950	S.CER 0402B273K100CT	T	17.5/33.7
C745	4030022260	S.CER GRM033R60J105MEA2D	T	39.2/37.3
C747	4030022260	S.CER GRM033R60J105MEA2D	T	42.4/37.5
C748	4030022260	S.CER GRM033R60J105MEA2D	B	37.5/37.8
C749	4030022260	S.CER GRM033R60J105MEA2D	T	17.7/37.4
C750	4030022160	S.CER GRM033B31A104KE84D	B	38.7/37.1
C752	4030022160	S.CER GRM033B31A104KE84D	B	38.4/36.0
C753	4030022160	S.CER GRM033B31A104KE84D	T	17.1/34.8
C755	4030022160	S.CER GRM033B31A104KE84D	B	16.8/38.0
C756	4030022160	S.CER GRM033B31A104KE84D	B	47.0/41.3
C759	4550008220	S.TAN F931C106MAA	B	10.2/44.8
C760	4030022050	S.CER GRM21BR61C226ME44L	B	48.8/41.0
C767	4520000020	S.NIO NOJC227M006RWJV	T	27.6/35.2
C768	4030022260	S.CER GRM033R60J105MEA2D	T	7.4/26.9
C769	4030022160	S.CER GRM033B31A104KE84D	B	50.1/38.7
C772	4030022140	S.CER GRM033B31H102KA12D	B	27.2/40.9
C774	4030022120	S.CER GRM0332C1H470JA01D	B	26.6/40.9
C777	4030022050	S.CER GRM21BR61C226ME44L	B	54.8/41.1
C792	4030025230	S.CER TMK107BJ105KAHT	T	7.0/31.4
Eqv.	4030025510	S.CER CL10B105KA8NNPC		
C793	4030025230	S.CER TMK107BJ105KAHT	B	45.6/42.1
Eqv.	4030025510	S.CER CL10B105KA8NNPC		
C794	4030025230	S.CER TMK107BJ105KAHT	T	9.9/27.3
Eqv.	4030025510	S.CER CL10B105KA8NNPC		
C798	4030022260	S.CER GRM033R60J105MEA2D	B	40.3/40.2
C799	4030022260	S.CER GRM033R60J105MEA2D	T	39.0/35.7
C800	4030022160	S.CER GRM033B31A104KE84D	B	32.2/7.1
C802	4030022260	S.CER GRM033R60J105MEA2D	T	19.1/32.4
C803	4030025320	S.CER GRM0332C1H151JA01D	T	19.1/31.1
C804	4030022260	S.CER GRM033R60J105MEA2D	T	22.7/29.9
C805	4030025370	S.CER GRM033R61C104KE14D	B	15.0/33.0
C806	4030025320	S.CER GRM0332C1H151JA01D	T	37.7/36.3
C807	4030022260	S.CER GRM033R60J105MEA2D	T	39.0/35.1
C808	4030022260	S.CER GRM033R60J105MEA2D	T	41.2/46.0
C809	4030022260	S.CER GRM033R60J105MEA2D	T	39.0/36.3
C810	4030022260	S.CER GRM033R60J105MEA2D	B	22.1/47.5
C811	4550007520	S.TAN F931A106MAABMA	B	25.1/43.8
C812	4030022260	S.CER GRM033R60J105MEA2D	B	21.5/47.5
C813	4030023110	S.CER 0402B152K500CT	T	16.4/32.1
C814	4030022260	S.CER GRM033R60J105MEA2D	B	50.9/31.1
C815	4030022160	S.CER GRM033B31A104KE84D	B	33.2/32.9
J700	6450000131	CON HSJ1102-018540		
J701	6450002530	CON HSJ4456-010320		
DS400	5030004550	LCD GP11538A6		
DS401	5040003500	S.LED HT-191 UYG-K828	T	52.8/4.6
DS402	5040003500	S.LED HT-191 UYG-K828	T	48.3/4.6
MC700	7700003280	S.MIC SPU0410HR5H-PB-7	T	36.6/6.6

M.= Mounted side (T: Mounted on the Top side, B: Mounted on the Bottom side)
H/V LOCATION=See the BOARD LAYOUTS for details.

[MAIN UNIT]

REF NO.	PARTS NO.	DESCRIPTION	M.	H/V LOCATION
S400	2250001090	ENC ED08902OFK150S070C-2015		
S401	2260003490	S.SWI TAFG-12W-QR	B	17.4/1.9
EP1	8930101610	LCD SRCN-4066-SP-N-W (SHJ)		
EP3	6910018460	S.BEA MMZ1005Y102C-T	B	33.3/9.5
EP4	6910014690	S.BEA MPZ1608S221A-T	B	24.5/20.0
EP400	6910021240	S.BEA MMZ1005A152ET	B	78.9/38.3
EP700	6910018460	S.BEA MMZ1005Y102C-T	B	24.0/45.6
EP701	6910018460	S.BEA MMZ1005Y102C-T	B	18.7/45.5
EP702	6910019900	S.BEA MPZ1608S601AT	B	26.6/42.1
EP703	6910016330	S.BEA MMZ1005S 601CT-S	B	38.3/42.0

Eqv.= This component is equivalent to the REF No. component listed above, and may be substituted on parts orders and repairs.

M.= Mounted side (T: Mounted on the Top side, B: Mounted on the Bottom side)
H/V LOCATION=See the BOARD LAYOUTS for details.

SECTION 6 MECHANICAL PARTS

[CHASSIS UNIT]

REF NO.	PART NO.	DESCRIPTION	QTY.
J1	6510032950	BNC-R4066	1
MP1	8010021713	3285 CHASSIS-3	1
MP2	8930079900	3285 TERMINAL HOLDER	1
MP5	8930080400	3285 MINUS TERMINAL	1
MP9	8830003390	VR NUT (AB)	1
MP10	8610014170	KNOB N-391	1
MP11	8930080280	3254 TOP SEAL	1
MP12	8810009511	PH BT M2×4 NI-ZC3 (3.6-4.0)	9
MP13	8810009511	PH BT M2×4 NI-ZC3 (3.6-4.0)	1
MP15	8810008761	PH BT M2×8 NI-ZC3	2
MP16	8210034560	4066 FRONT PANEL ASSEMBLY [#11]	1
	8210034560	4066 FRONT PANEL ASSEMBLY [#12]	1
	8210034560	4066 FRONT PANEL ASSEMBLY [#13]	1
	8210034550	4066 FRONT PANEL ASSEMBLY (A) [#31]	1
MP21	8930101250	4066 SIDE SEAL (KOB)	1
MP22	8930101260	4066 SIDE PLATE	1
MP24	8930101210	THERMAL SHEET DT TC-200CAT-20 (8×12)	1
MP26	8830004670	STEP NUT (Q)	1
MP28	8850003421	SEALING WASHER (AA)-1 (TOT)	1
MP30	8930100760	3620 MIC RUBBER (KOB)	1
MP33	8930080100	3285 PLUS TERMINAL	1

[MAIN UNIT]

REF NO.	PART NO.	DESCRIPTION	QTY.
DS400	5030004550	GP11538A6	1
MC700*	7700003280	SPU0410HR5H-PB-7	1
S400	2250001090	ED08902OFK150S070C-2015	1
S401*	2260003490	TAFG-12W-QR	1
EP1	8930101610	SRCN-4066-SP-N-W (SHJ)	1
MP1*	8510022740	4066 VCO CASE	1
MP4*	8930101081	3620 SP SPRING-1	1
MP5*	8930100370	4066 ANT SPRING	1
MP6*	8410003170	4066 PA HEATSINK	1
MP7	8210034210	4066 REFLECTOR	1
MP8	8930101200	4066 LCD HOLDER	1
MP9	8930080260	3254 WHITE SHEET	1

[ACCESSORIES]

REF NO.	PARTS NO.	DESCRIPTION	QTY.
EP1	–	FA-B57V† [#11]	1
	–	FA-B45V† [#12]	1
	–	FA-B57V† [#13]	1
	–	FA-B45V† [#31]	1
EP2	–	BP-298† [#11]	1
	–	BP-298† [#12]	1
	–	BP-264† [#13]	1
	–	BP-298† [#31]	1
EP3	–	BC-240† [#11]	1
	–	BC-240† [#12]	1
	–	BC-192† [#13]	1
	–	BC-240† [#31]	1
EP4	–	BC-242†	1
MP1	–	MB-124†	1
MP2	8210025841	3285 JACK PANEL-1	1
MP3	8810004861	PH M2×6 ZK3	2

† Sold as an option.

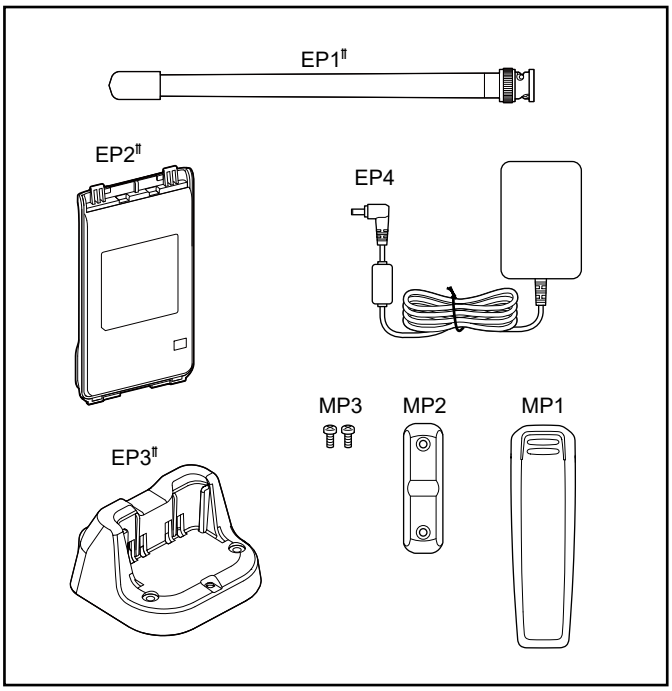

⇑ The shape will differ depending on the transceiver version.

*: Refer to "BOARD LAYOUTS" for the location.

Screw abbreviations A, B0, BT: Self-tapping PH: Pan head BS: Brass NI: Nickel ZU: Zinc SUS: Stainless

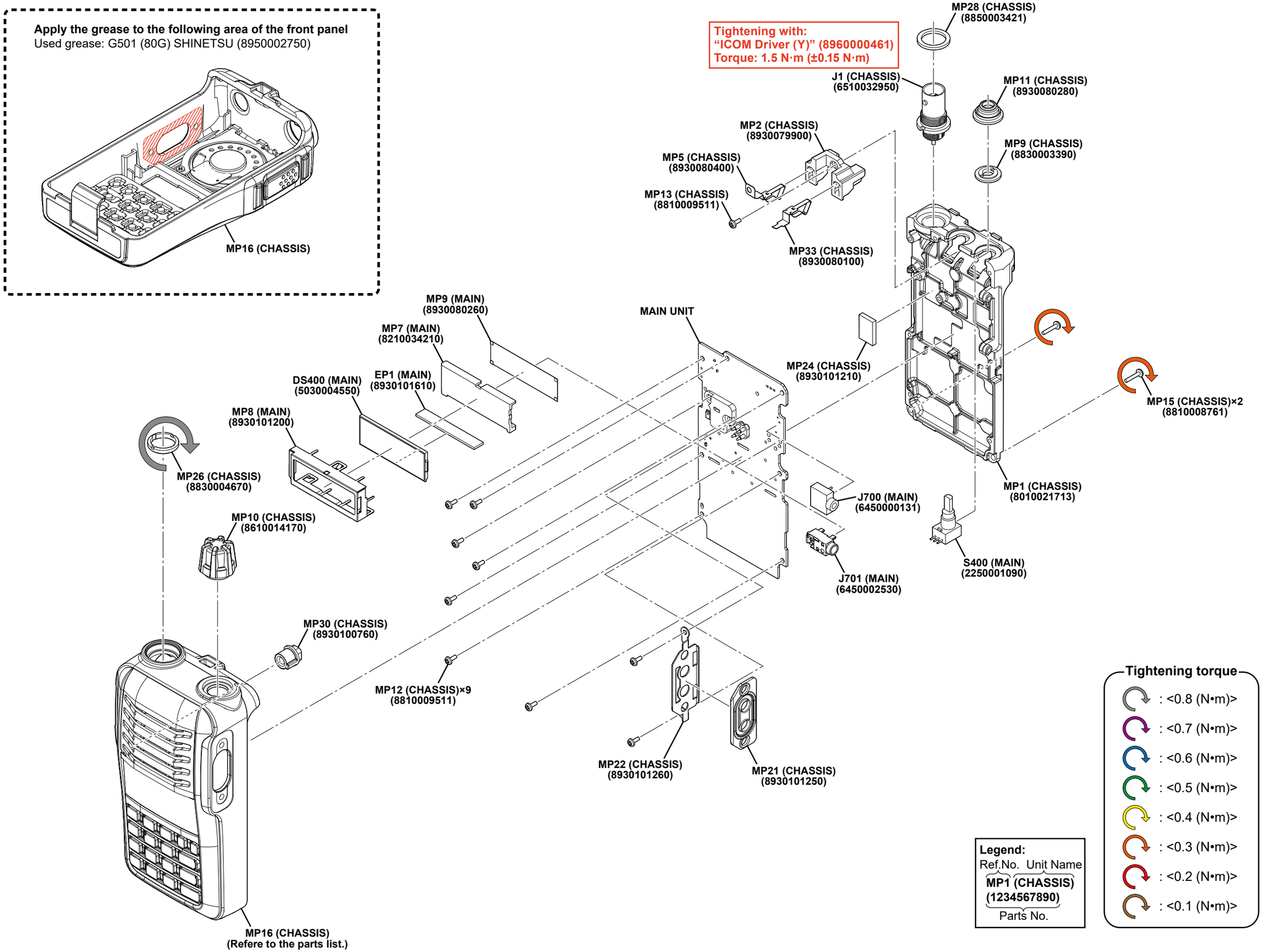
Apply the grease to the following area of the front panel
Used grease: G501 (80G) SHINETSU (8950002750)
MP16 (CHASSIS)
Tightening with:
"ICOM Driver (Y)" (8960000461)
Torque: 1.5 N·m (±0.15 N·m)
MP28 (CHASSIS)
(8850003421)
J1 (CHASSIS)
(6510032950)
MP11 (CHASSIS)
(8930080280)
MP2 (CHASSIS)
(8930079900)
MP9 (CHASSIS)
(8830003390)
MP5 (CHASSIS)
(8930080400)
MP13 (CHASSIS)
(8810009511)
MP33 (CHASSIS)
(8930080100)
MP9 (MAIN)
(8930080260)
MAIN UNIT
MP7 (MAIN)
(8210034210)
MP24 (CHASSIS)
(8930101210)
DS400 (MAIN)
(5030004550)
EP1 (MAIN)
(8930101610)
MP15 (CHASSIS)×2
(8810008761)
MP8 (MAIN)
(8930101200)
MP26 (CHASSIS)
(8830004670)
MP1 (CHASSIS)
(8010021713)
J700 (MAIN)
(6450000131)
MP10 (CHASSIS)
(8610014170)
S400 (MAIN)
(2250001090)
J701 (MAIN)
(6450002530)
MP30 (CHASSIS)
(8930100760)
MP12 (CHASSIS)×9
(8810009511)
MP22 (CHASSIS)
(8930101260)
MP21 (CHASSIS)
(8930101250)
MP16 (CHASSIS)
(Refere to the parts list.)
Legend:
Ref.No. Unit Name
MP1 (CHASSIS)
(1234567890)
Parts No.
Tightening torque
: <0.8 (N•m)>
: <0.7 (N•m)>
: <0.6 (N•m)>
: <0.5 (N•m)>
: <0.4 (N•m)>
: <0.3 (N•m)>
: <0.2 (N•m)>
: <0.1 (N•m)>

The actual configuration of the PC board can be seen by viewing the top and bottom BOARD LAYOUT pages together.

• **MAIN UNIT (B-8938C: TOP VIEW)**

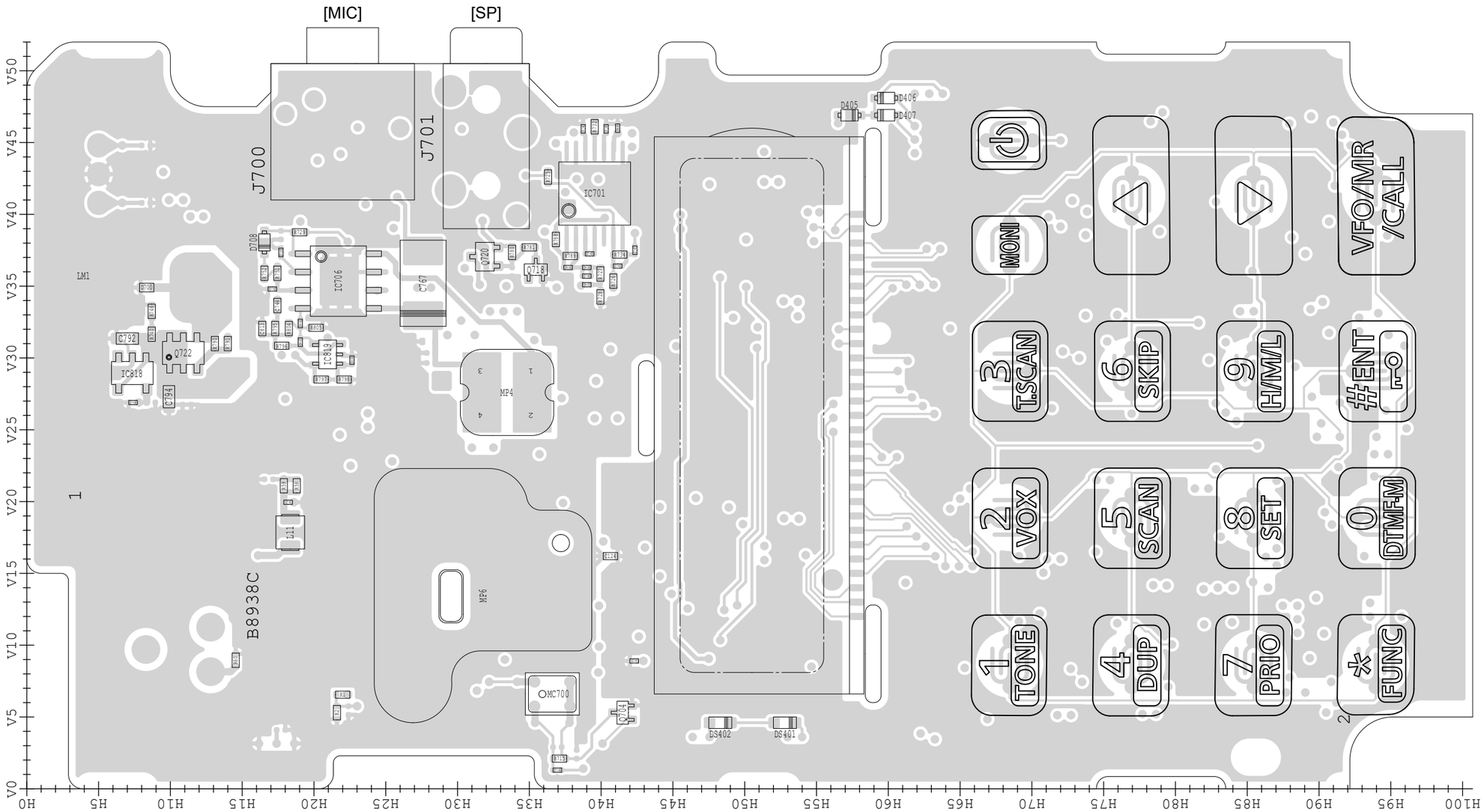

See the PARTS LIST H/V location on the PARTS LIST for location details.

The actual configuration of the PC board can be seen by viewing the top and bottom BOARD LAYOUT pages together.

• MAIN UNIT (B-8938C: BOTTOM VIEW)

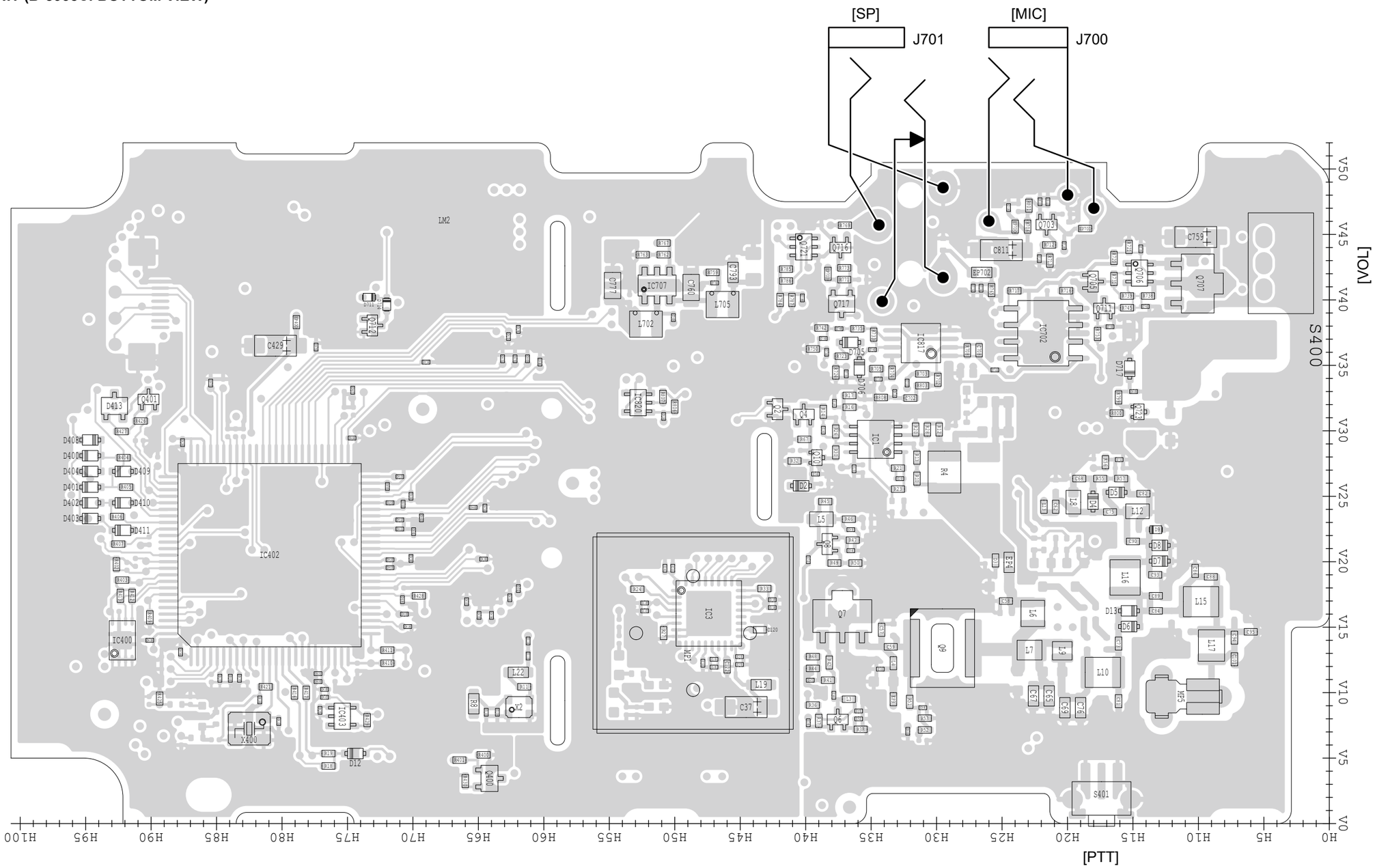

SECTION 8 BLOCK DIAGRAM

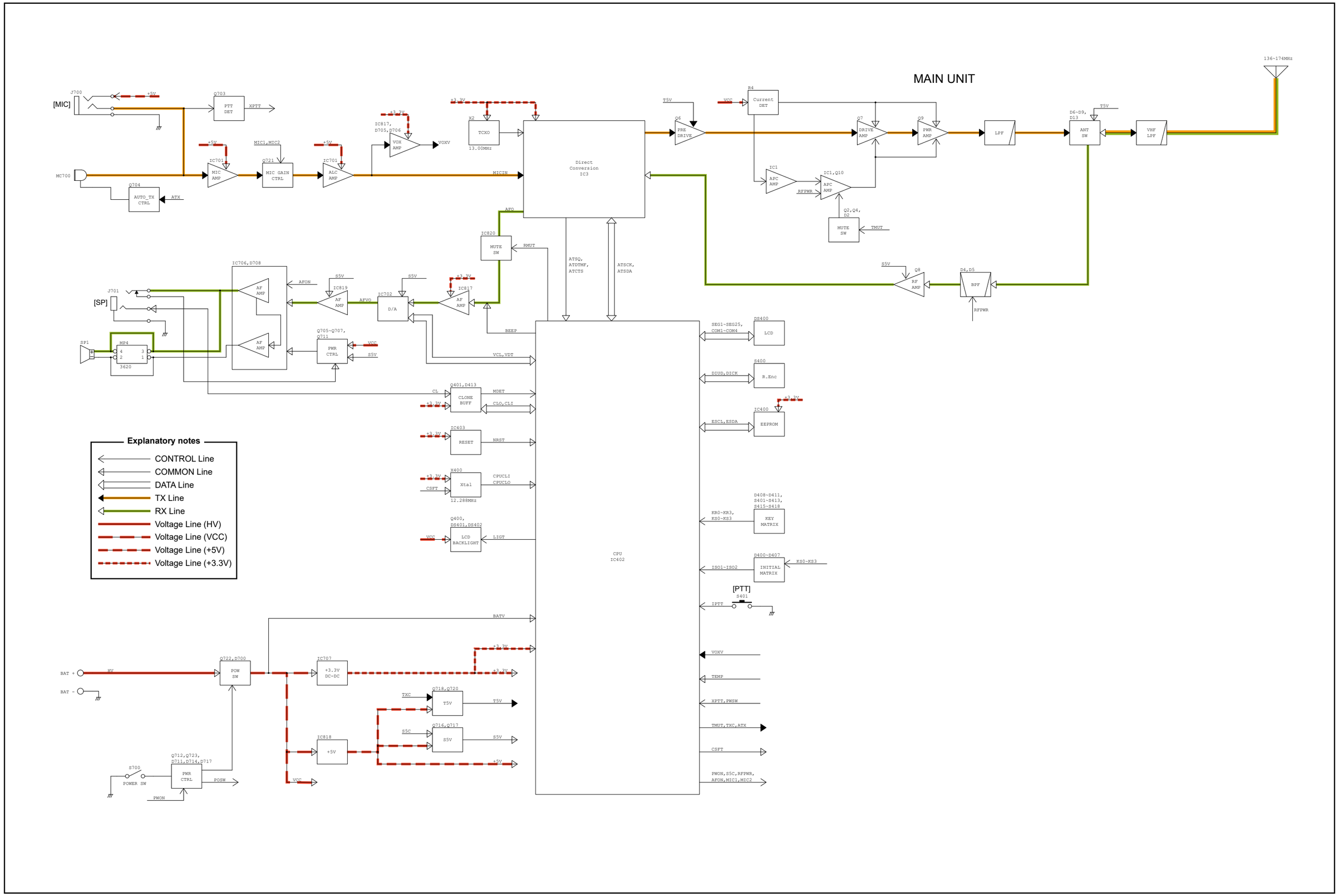

• MAIN UNIT (1/3)

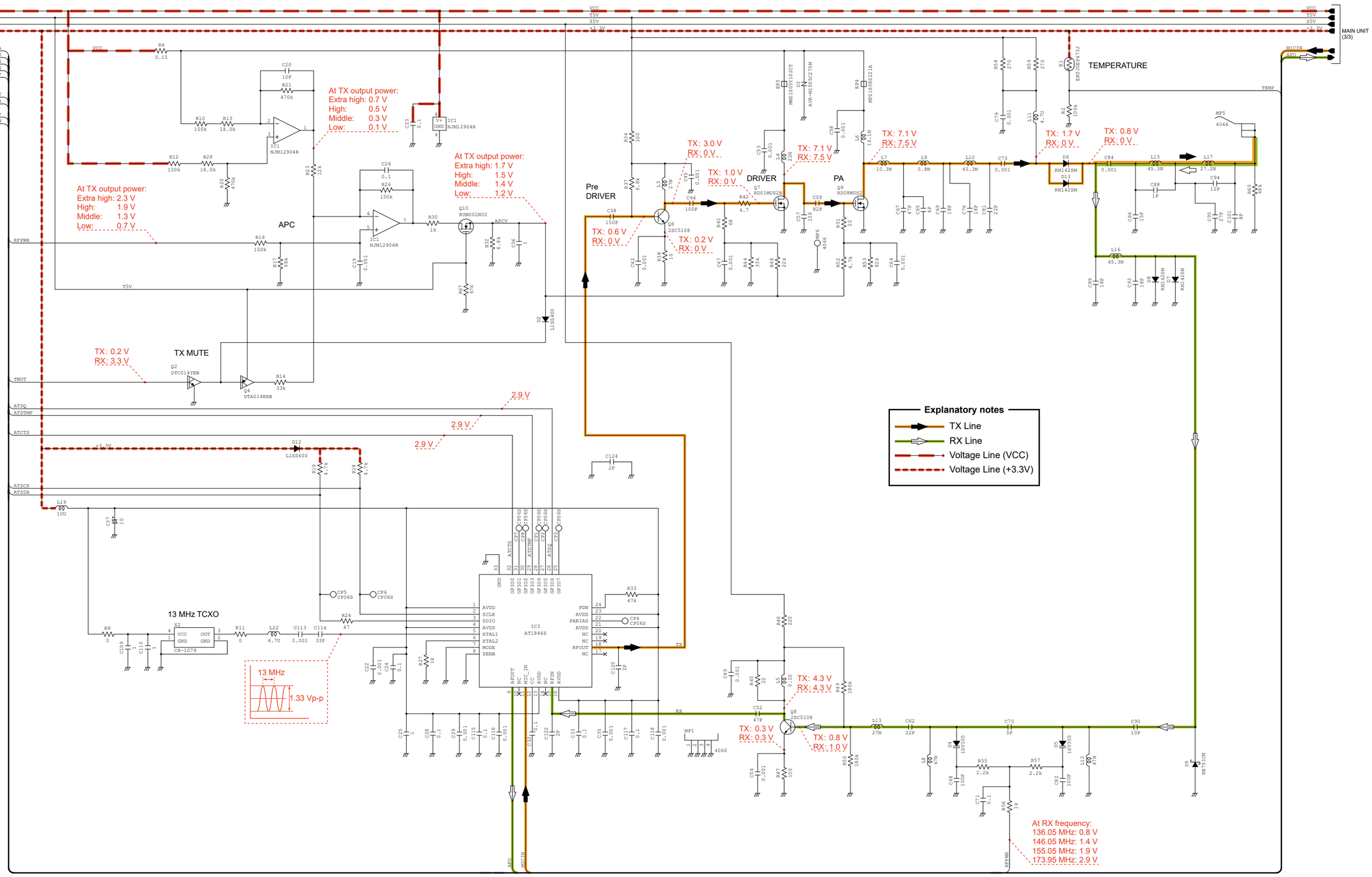

* Refer to the PARTS LIST for the value and name of component.

• **MAIN UNIT (2/3)**

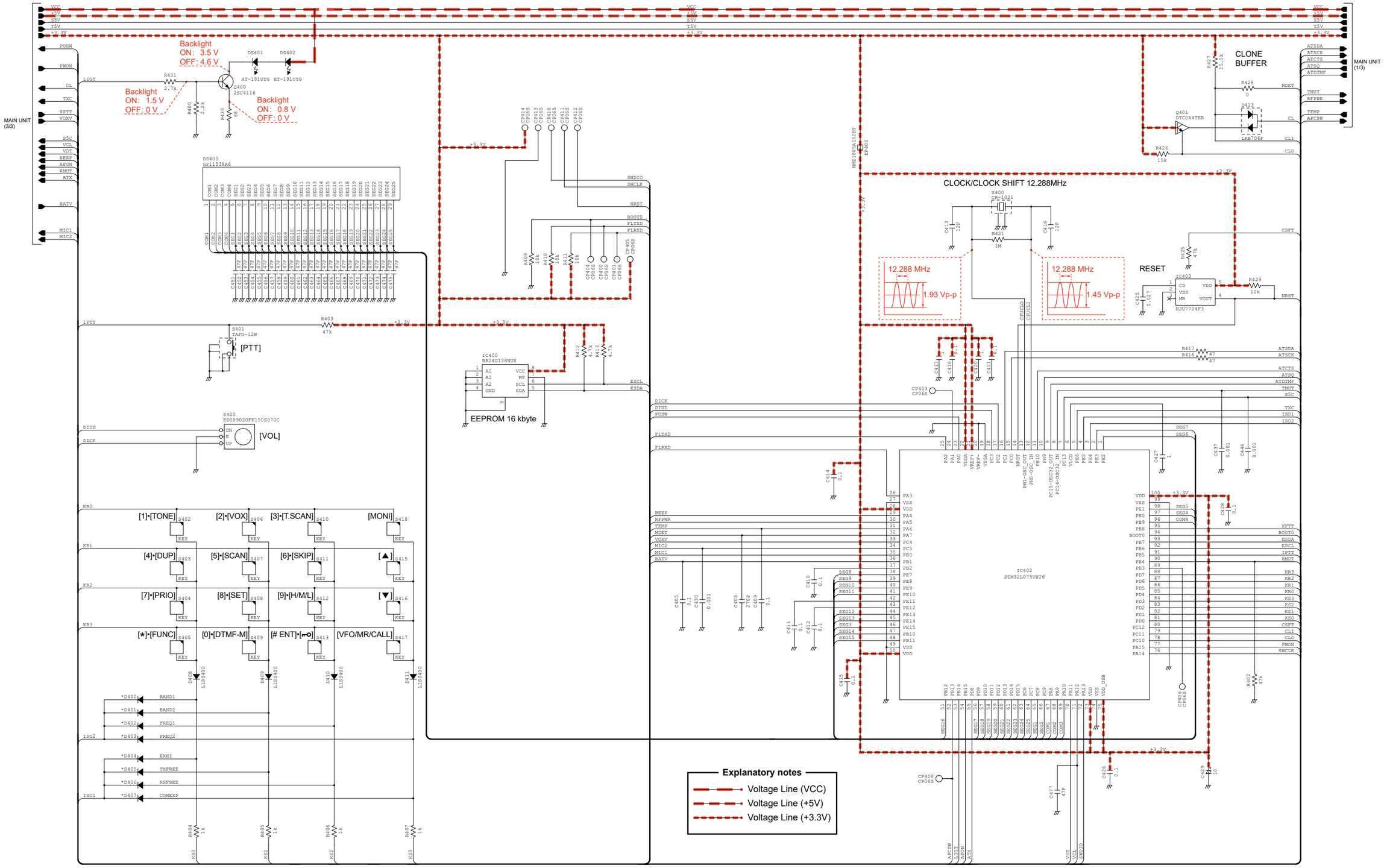

* Refer to the PARTS LIST for the value and name of component.

• MAIN UNIT (3/3)

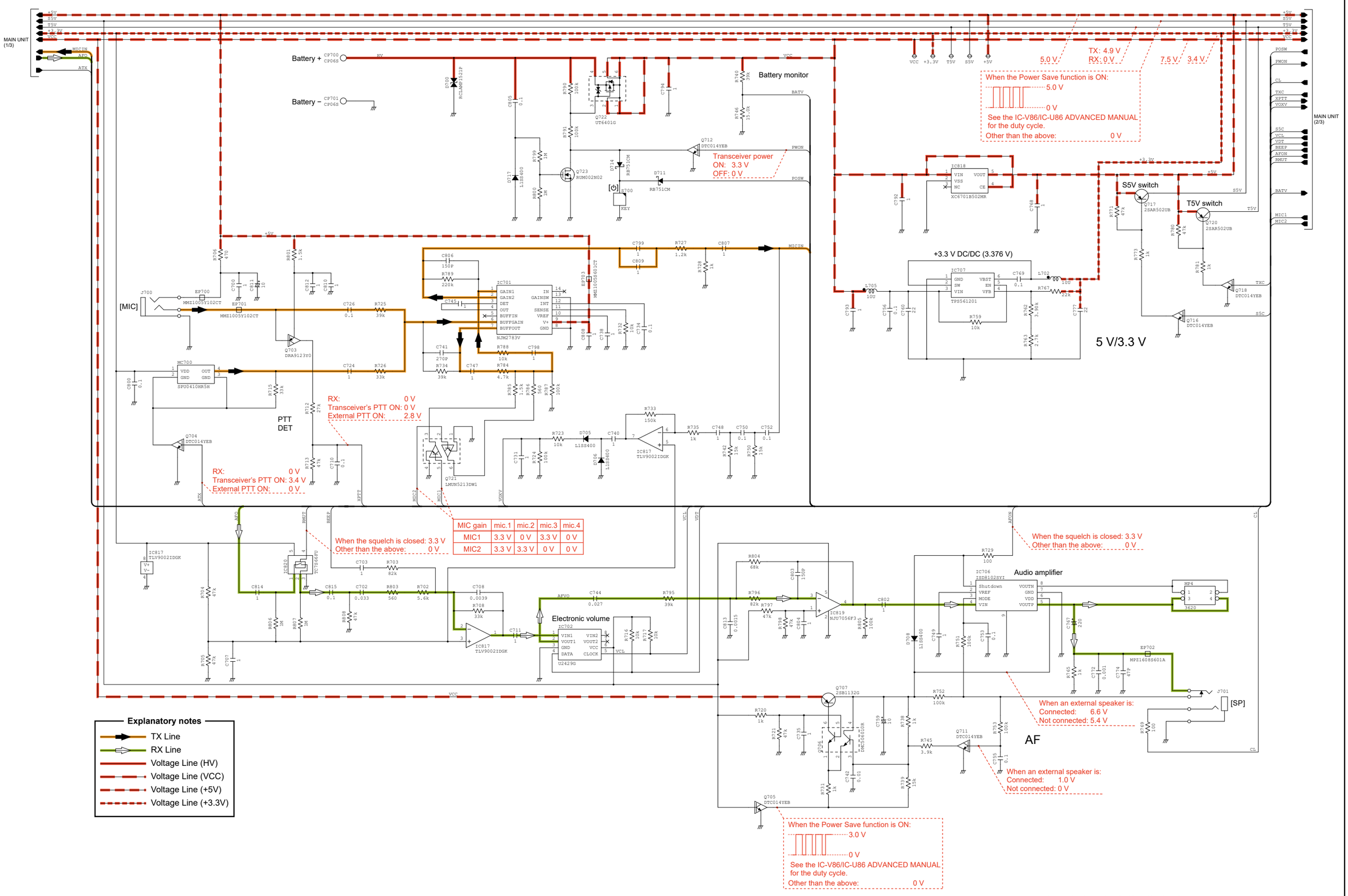

MIC gain	mic.1	mic.2	mic.3	mic.4
MIC1	3.3 V	0 V	3.3 V	0 V
MIC2	3.3 V	3.3 V	0 V	0 V

* Refer to the PARTS LIST for the value and name of component.

If you have any inquiries regarding service, contact your distributor. The contact number or E-mail address of your distributor can be found on our website.

https://www.icomjapan.com/

Count on us!

Icom Inc.
1-1-32, Kamiminami, Hirano-ku, Osaka 547-0003, Japan

S-15514XZ-C1
© 2019 Icom Inc.